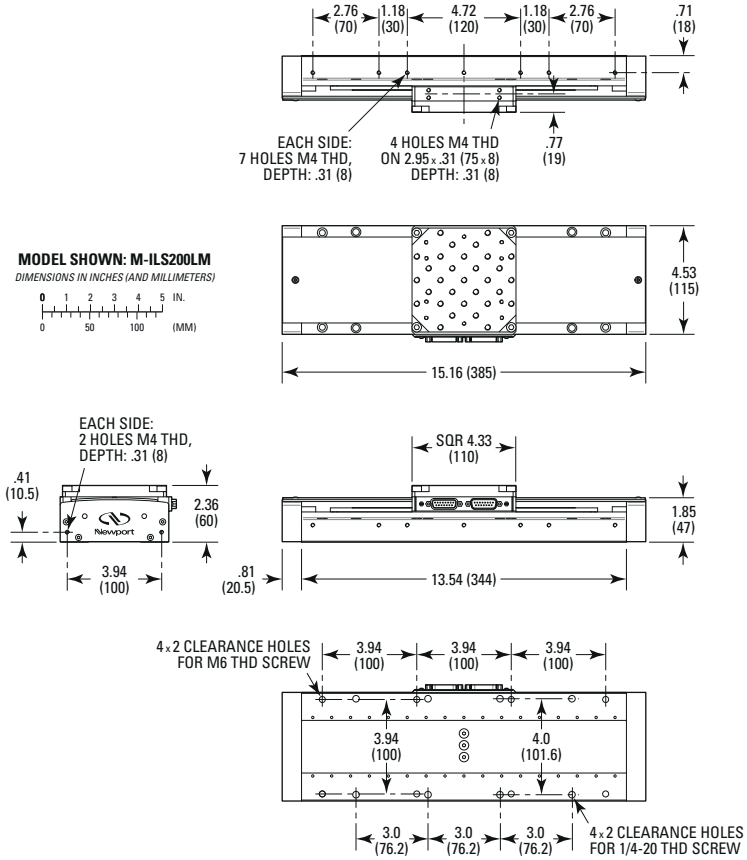
2.76 (70)
1.18 (30)
4.72 (120)
1.18 (30)
2.76 (70)
.71 (18)
EACH SIDE: 7 HOLES M4 THD, DEPTH: .31 (8)
4 HOLES M4 THD ON 2.95 x .31 (75 x 8) DEPTH: .31 (8)
.77 (19)
MODEL SHOWN: M-ILS200LM
DIMENSIONS IN INCHES (AND MILLIMETERS)
0 1 2 3 4 5 IN.
0 50 100 (MM)
4.53 (115)
15.16 (385)
EACH SIDE: 2 HOLES M4 THD, DEPTH: .31 (8)
.41 (10.5)
2.36 (60)
3.94 (100)
SQR 4.33 (110)
1.85 (47)
.81 (20.5)
13.54 (344)
4 x 2 CLEARANCE HOLES FOR M6 THD SCREW
3.94 (100)
3.94 (100)
3.94 (100)
3.94 (100)
4.0 (101.6)
3.0 (76.2)
3.0 (76.2)
3.0 (76.2)
4 x 2 CLEARANCE HOLES FOR 1/4-20 THD SCREW

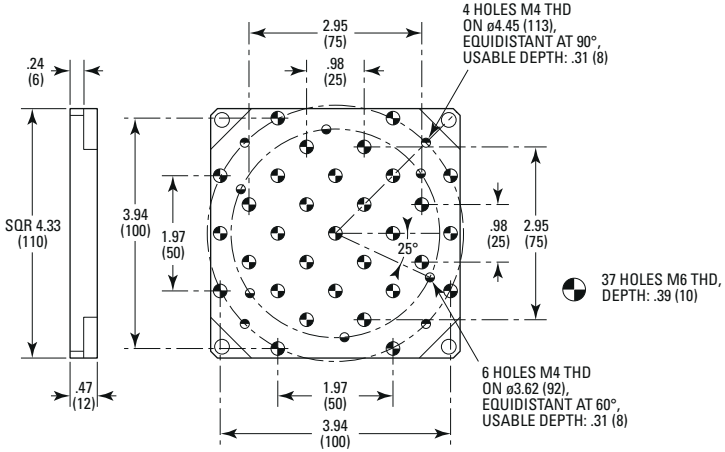
4 HOLES M4 THD ON ø4.45 (113), EQUIDISTANT AT 90°, USABLE DEPTH: .31 (8)
2.95 (75)
.24 (6)
.98 (25)
SQR 4.33 (110)
3.94 (100)
1.97 (50)
25°
.98 (25)
2.95 (75)
37 HOLES M6 THD, DEPTH: .39 (10)
6 HOLES M4 THD ON ø3.62 (92), EQUIDISTANT AT 60°, USABLE DEPTH: .31 (8)
.47 (12)
1.97 (50)
3.94 (100)

Newport