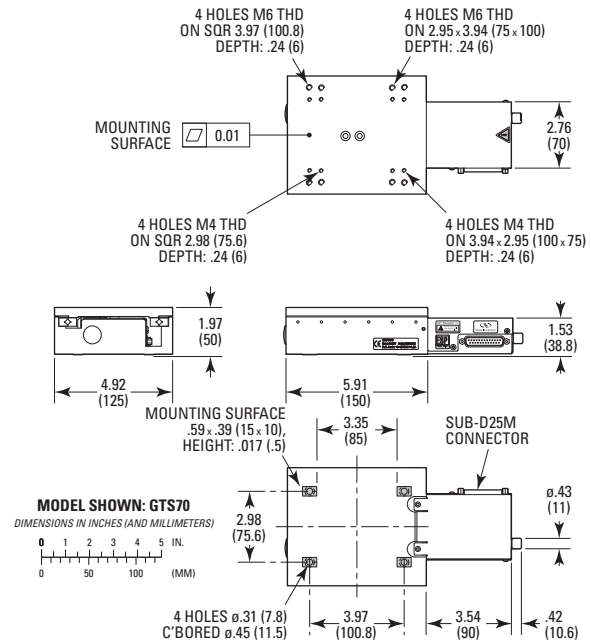
4 HOLES M6 THD
ON SQR 3.97 (100.8)
DEPTH: .24 (6)
4 HOLES M6 THD
ON 2.95 x 3.94 (75 x 100)
DEPTH: .24 (6)
MOUNTING
SURFACE
0.01
2.76
(70)
4 HOLES M4 THD
ON SQR 2.98 (75.6)
DEPTH: .24 (6)
4 HOLES M4 THD
ON 3.94 x 2.95 (100 x 75)
DEPTH: .24 (6)
1.97
(50)
1.53
(38.8)
4.92
(125)
5.91
(150)
MOUNTING SURFACE
.59 x .39 (15 x 10),
HEIGHT: .017 (.5)
3.35
(85)
SUB-D25M
CONNECTOR
MODEL SHOWN: GTS70
DIMENSIONS IN INCHES (AND MILLIMETERS)
0 1 2 3 4 5 IN.
0 50 100 (MM)
2.98
(75.6)
ø.43
(11)
4 HOLES ø.31 (7.8)
C'BORED ø.45 (11.5)
3.97
(100.8)
3.54
(90)
.42
(10.6)

Newport