MODEL SHOWN: MTN200CC

DIMENSIONS IN INCHES (AND MILLIMETERS)

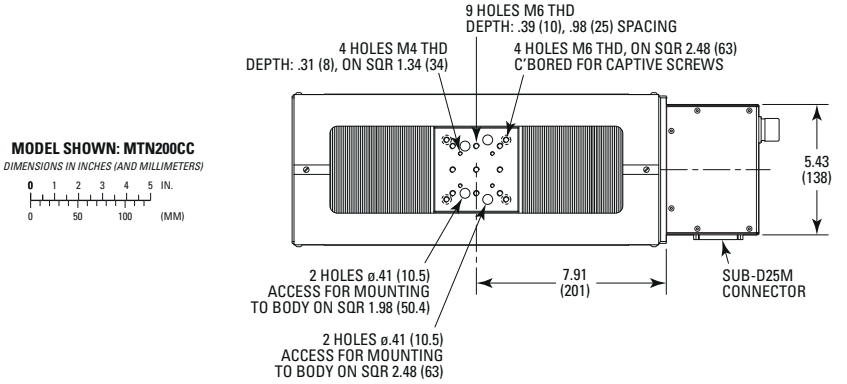

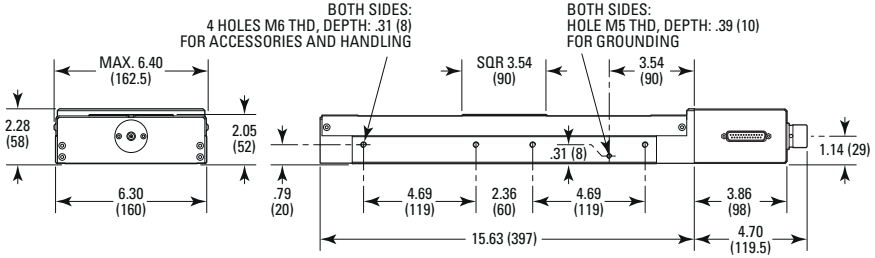

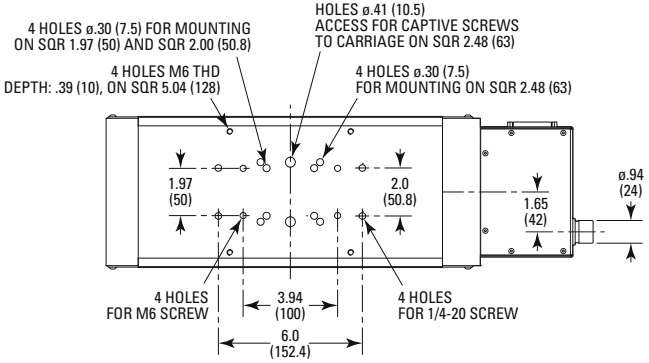

Newport