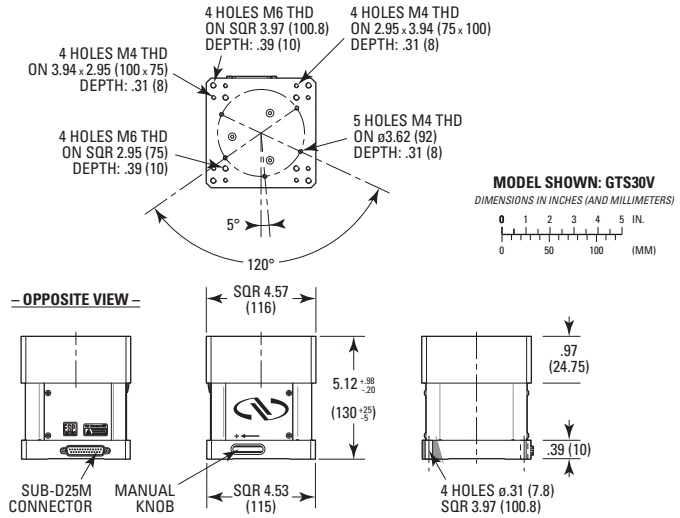
4 HOLES M6 THD
ON SQR 3.97 (100.8)
DEPTH: .39 (10)
4 HOLES M4 THD
ON 2.95 x 3.94 (75 x 100)
DEPTH: .31 (8)
4 HOLES M4 THD
ON 3.94 x 2.95 (100 x 75)
DEPTH: .31 (8)
5 HOLES M4 THD
ON ø3.62 (92)
DEPTH: .31 (8)
4 HOLES M6 THD
ON SQR 2.95 (75)
DEPTH: .39 (10)
5°
120°
MODEL SHOWN: GTS30V
DIMENSIONS IN INCHES (AND MILLIMETERS)
0 1 2 3 4 5 IN.
0 50 100 (MM)
– OPPOSITE VIEW –
SQR 4.57
(116)
5.12 +.98 -.20
(130 +25 -5)
.97
(24.75)
.39 (10)
SUB-D25M
CONNECTOR
MANUAL
KNOB
SQR 4.53
(115)
4 HOLES ø.31 (7.8)
SQR 3.97 (100.8)

Newport