MODEL SHOWN: M-ILS200HA

DIMENSIONS IN INCHES (AND MILLIMETERS)

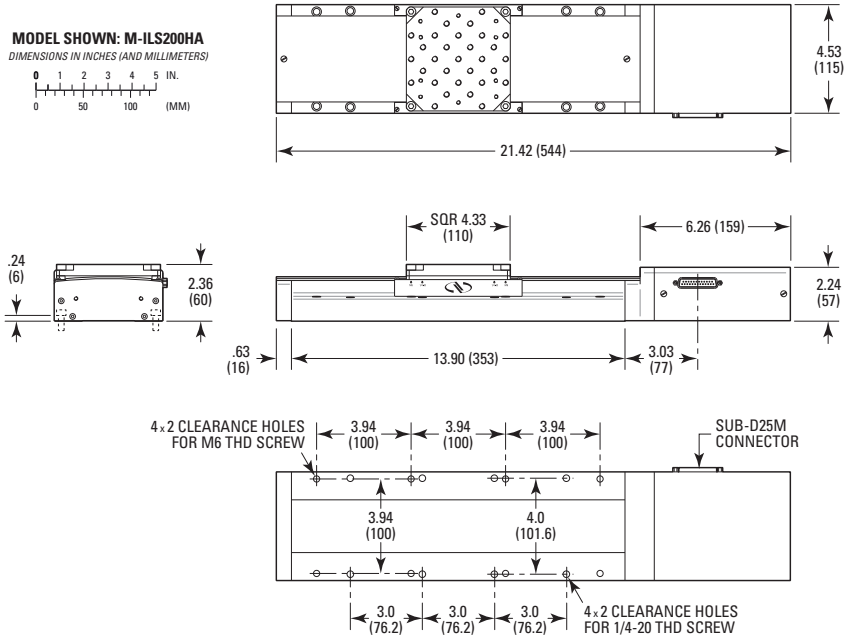

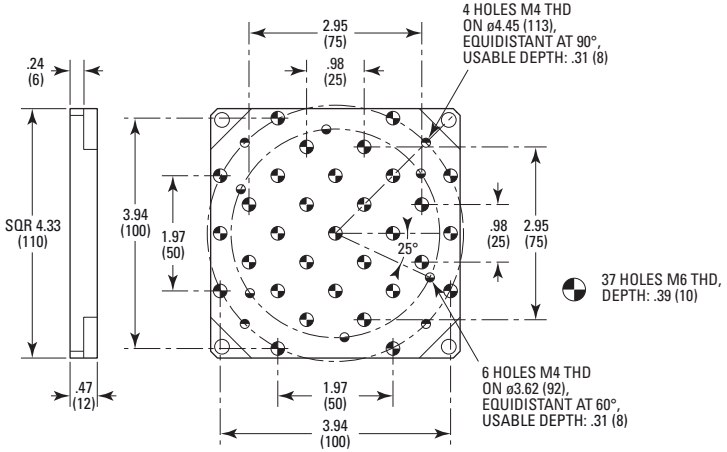

Newport