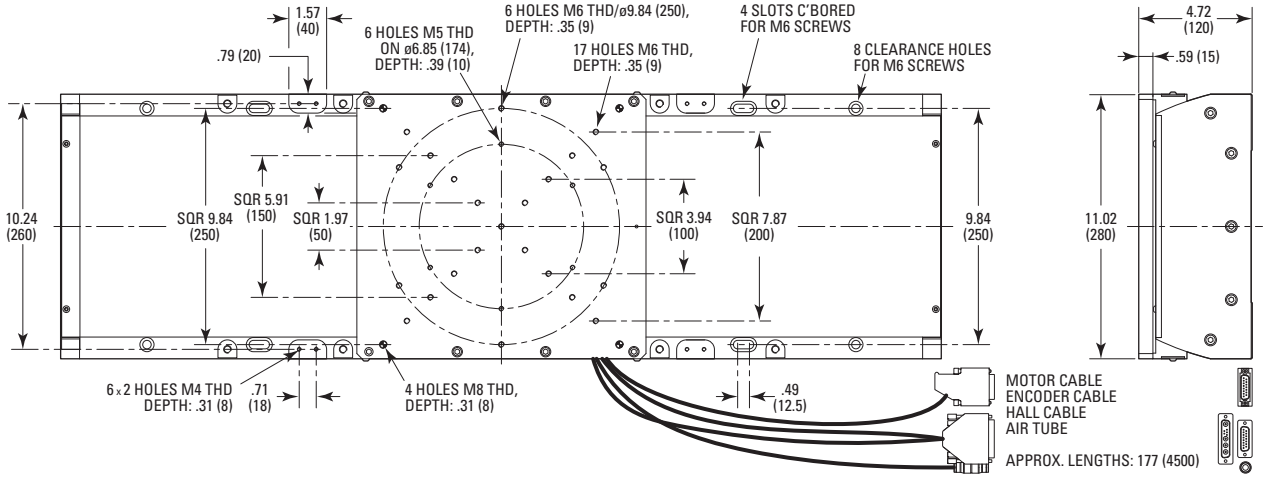

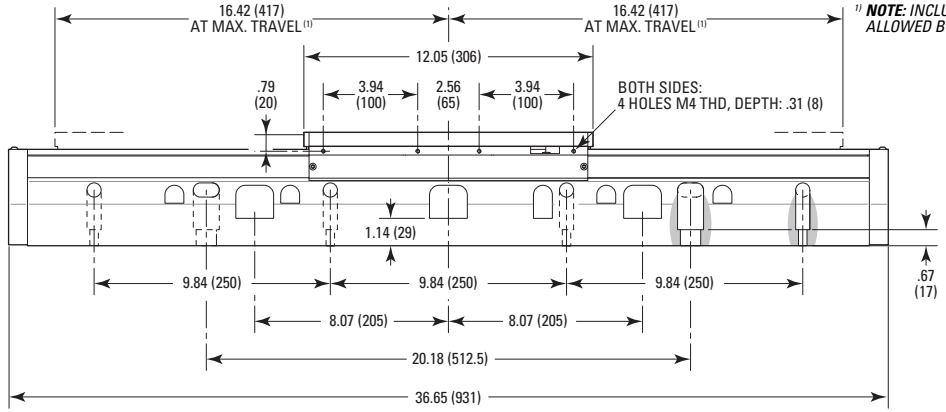

(1) ***NOTE:** INCLUDING OVER-TRAVEL ALLOWED BY THE HARD STOP.*

MODEL SHOWN: IDL280-500LM

DIMENSIONS IN INCHES (AND MILLIMETERS)

Newport