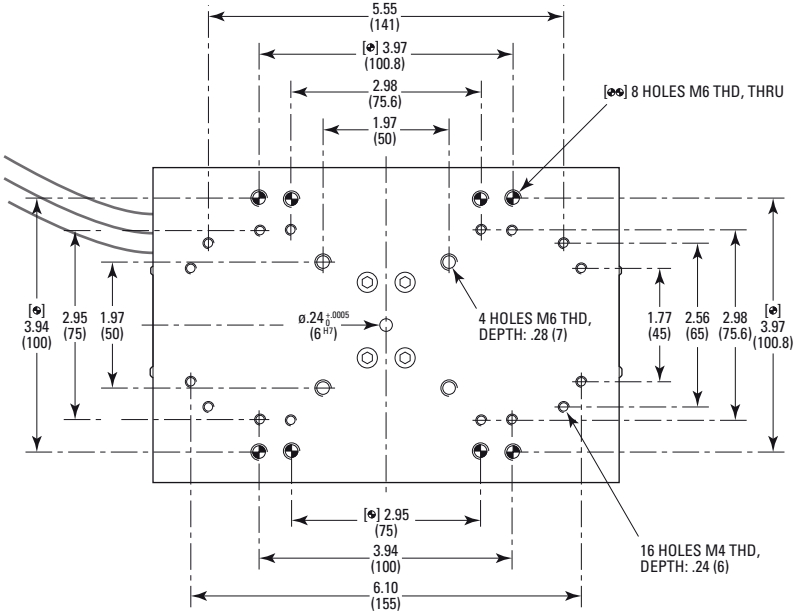

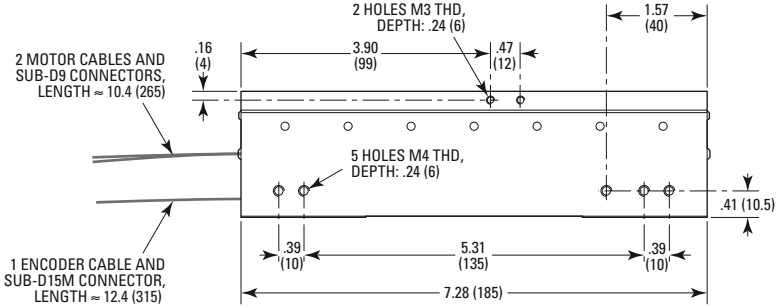

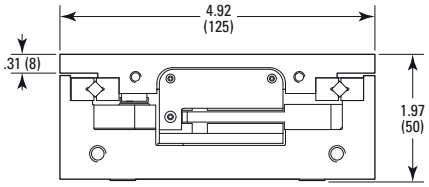

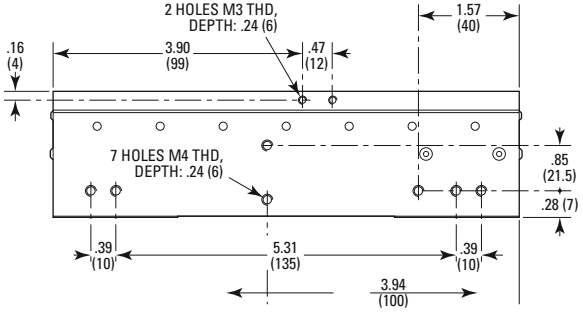

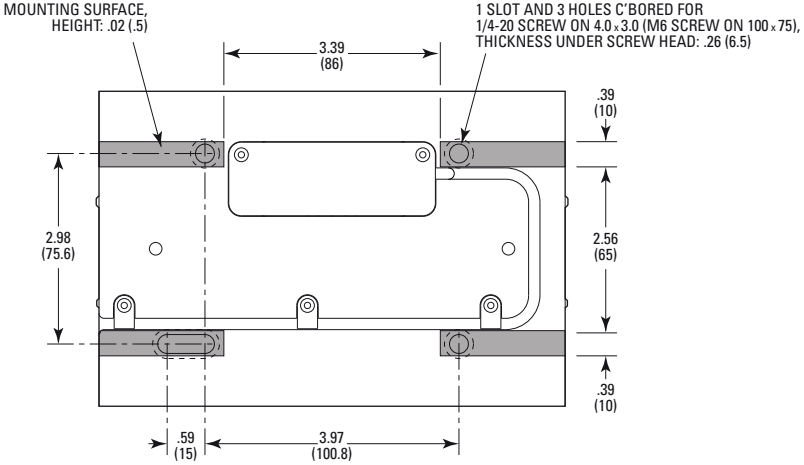

MODEL SHOWN: XMS100-S

DIMENSIONS IN INCHES (AND MILLIMETERS)

0 1.0 2.0 3.0 IN.

0 20 40 60 (MM)

SCALE 1:3

Newport