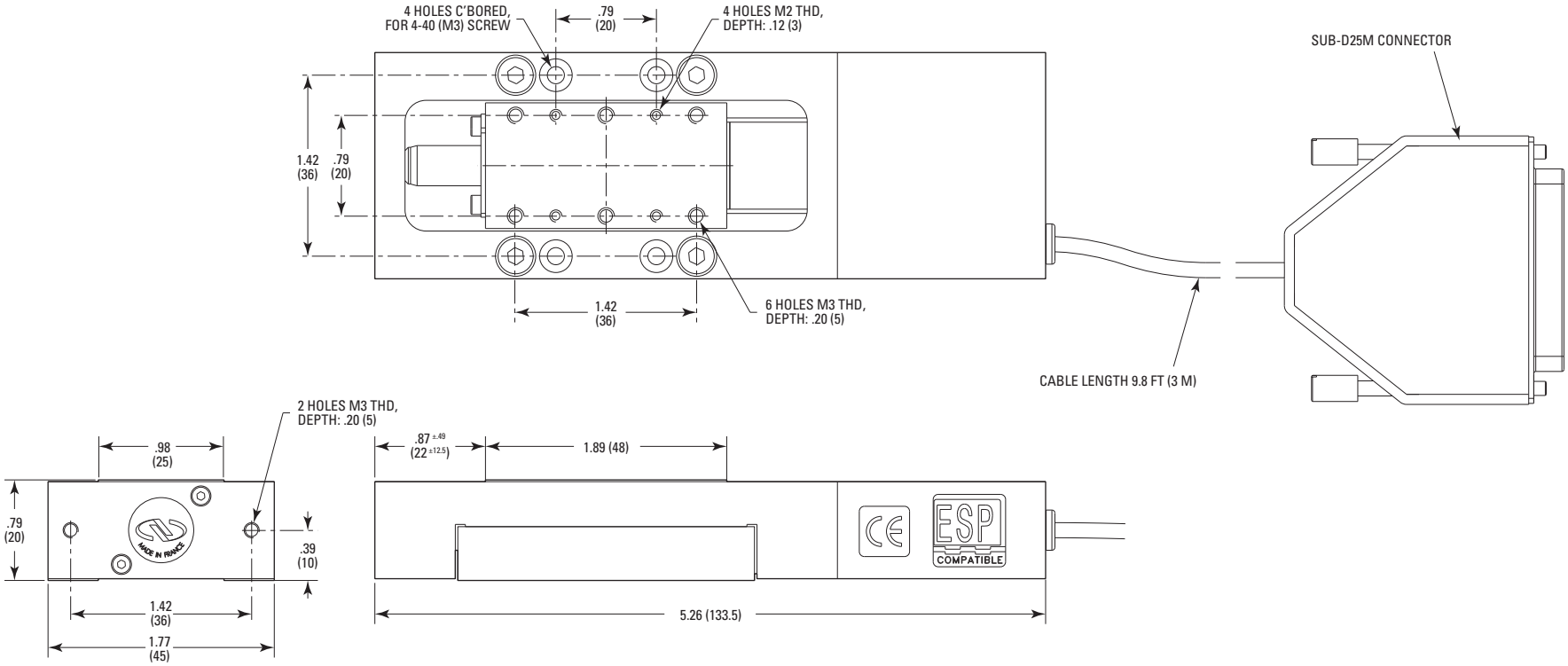

MODEL SHOWN: MFA-CC & MFA-PPD

DIMENSIONS IN INCHES (AND MILLIMETERS)

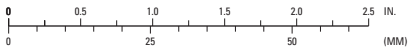

Newport