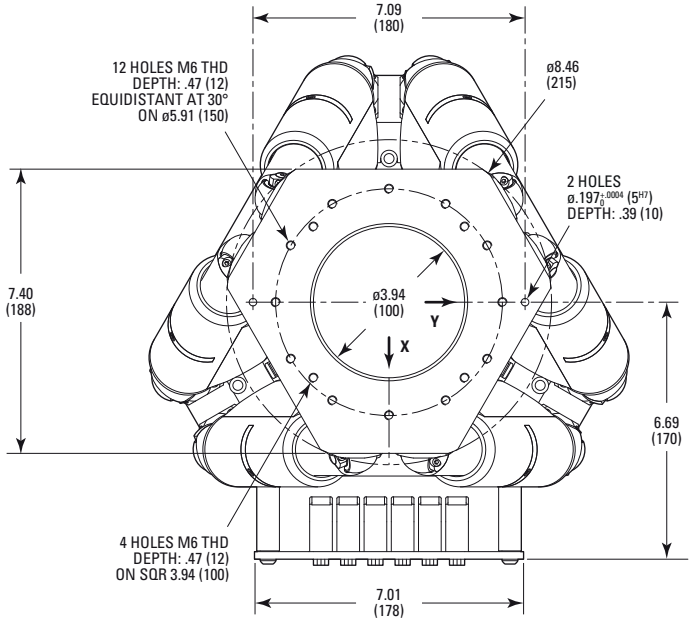

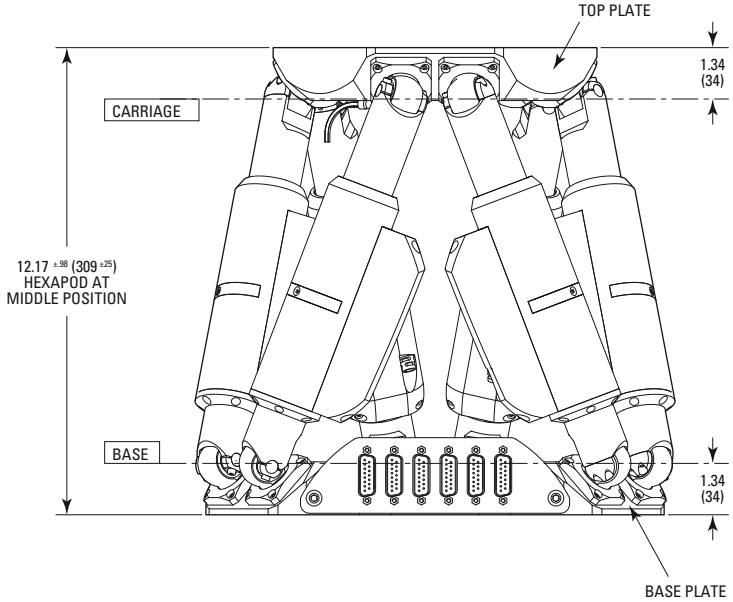

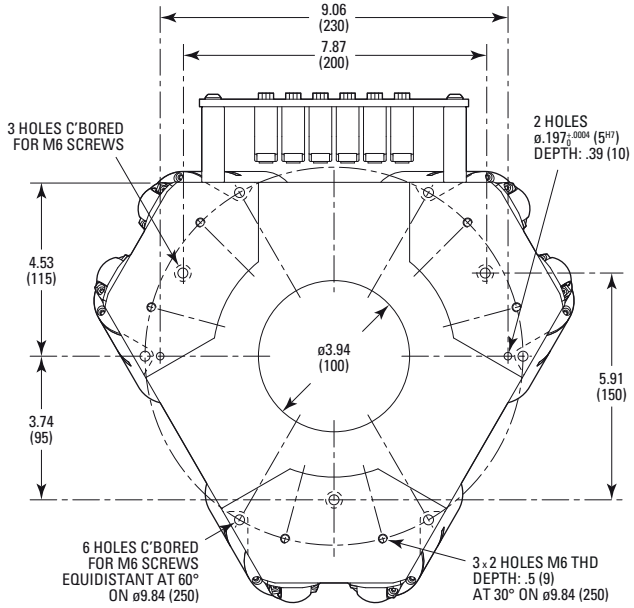

MODEL SHOWN: HXP200-MECA

DIMENSIONS IN INCHES (AND MILLIMETERS)

Newport