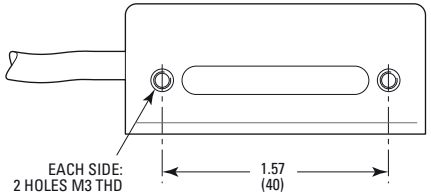

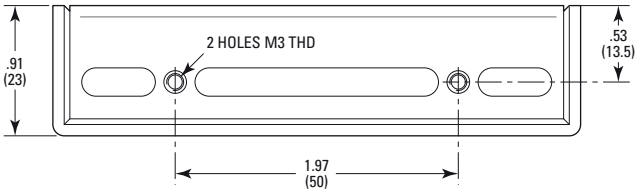

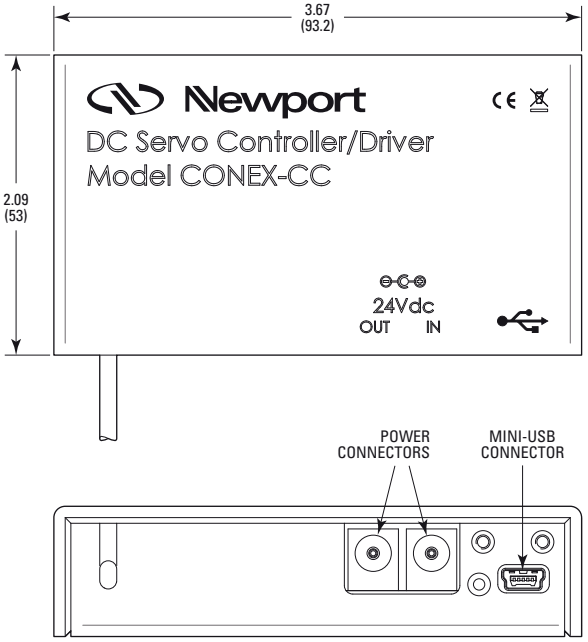

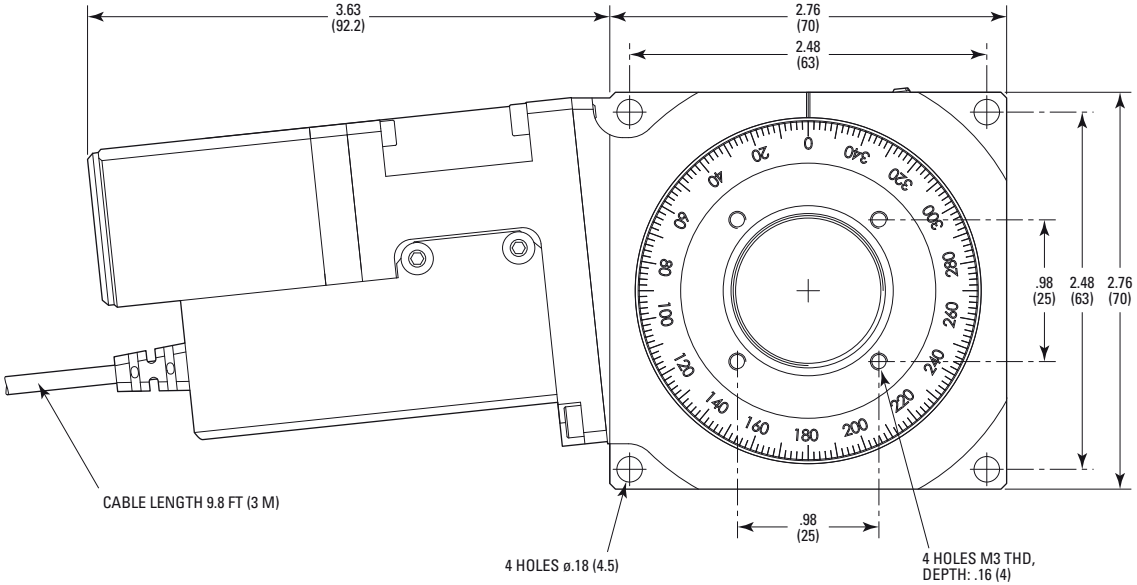

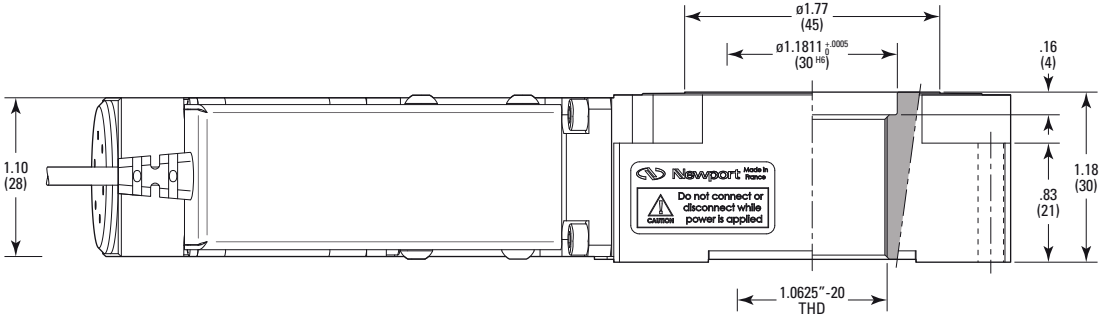

MODEL SHOWN: CONEX-URS50BCC

DIMENSIONS IN INCHES (AND MILLIMETERS)

SCALE 3:4

Newport