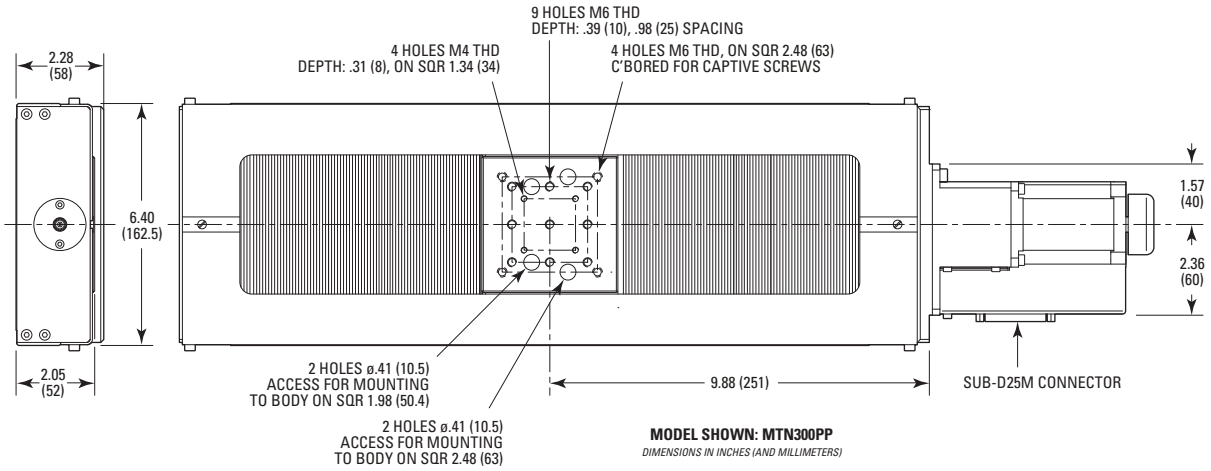

MODEL SHOWN: MTN300PP

DIMENSIONS IN INCHES (AND MILLIMETERS)

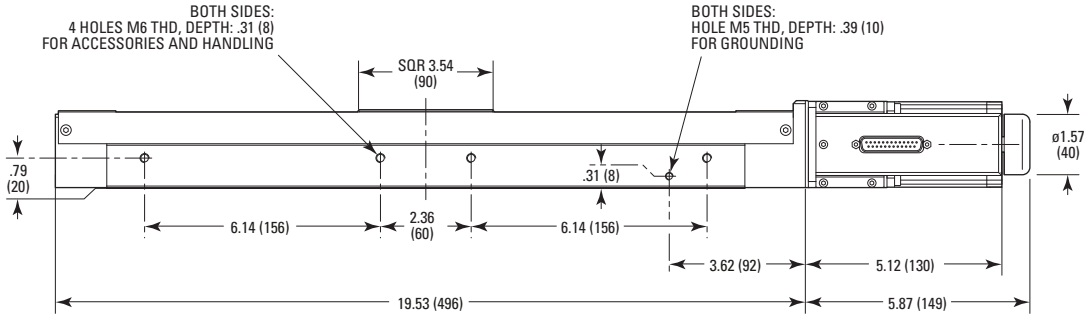

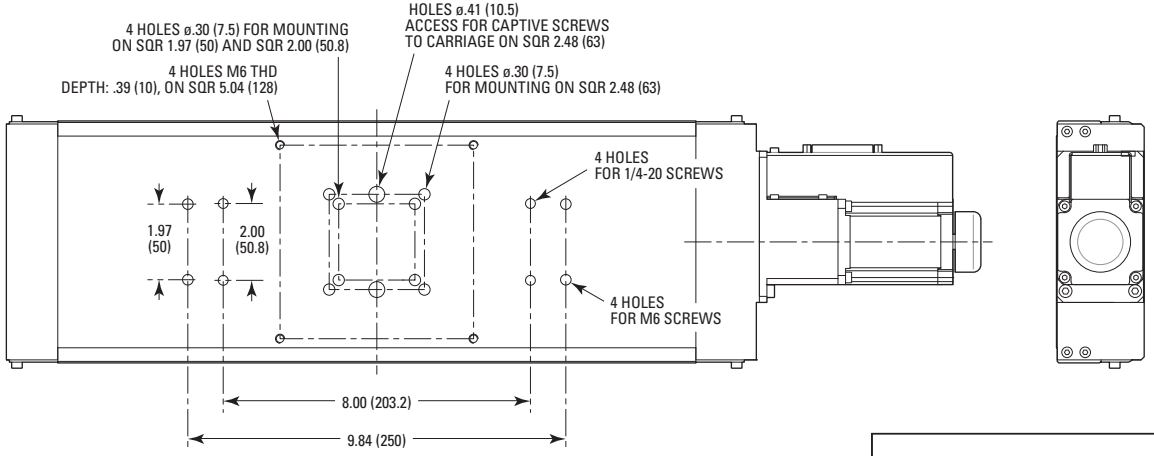

Newport