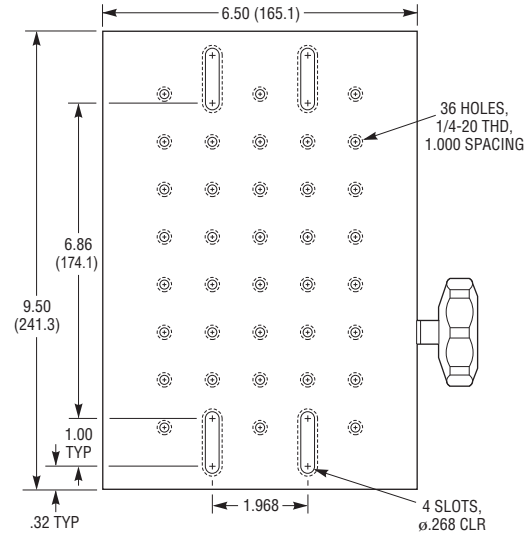
6.50 (165.1)
36 HOLES,
1/4-20 THD,
1.000 SPACING
6.86
(174.1)
9.50
(241.3)
1.00
TYP
.32 TYP
1.968
4 SLOTS,
ø.268 CLR

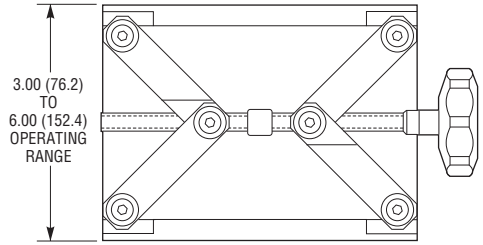
3.00 (76.2)
TO
6.00 (152.4)
OPERATING
RANGE

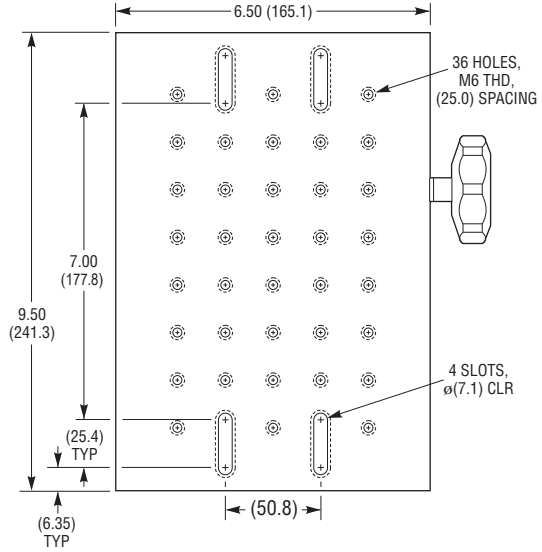
6.50 (165.1)
36 HOLES,
M6 THD,
(25.0) SPACING
7.00
(177.8)
9.50
(241.3)
4 SLOTS,
ø(7.1) CLR
(25.4)
TYP
(6.35)
TYP
(50.8)

Newport