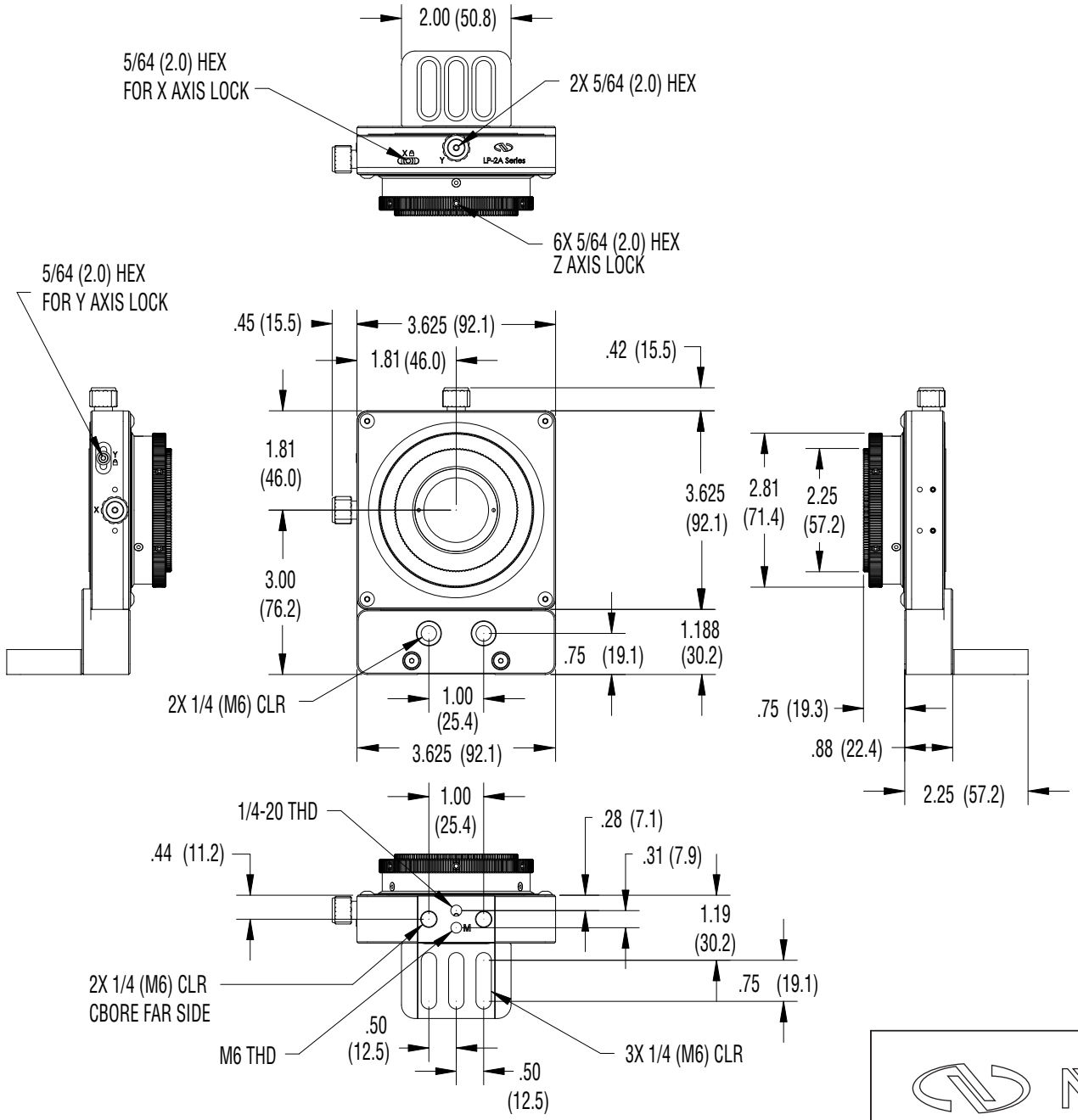
2.00 (50.8)
5/64 (2.0) HEX
FOR X AXIS LOCK
2X 5/64 (2.0) HEX
LP-2A Series
6X 5/64 (2.0) HEX
Z AXIS LOCK
5/64 (2.0) HEX
FOR Y AXIS LOCK
.45 (15.5)
3.625 (92.1)
1.81 (46.0)
.42 (15.5)
1.81
(46.0)
3.625
(92.1)
2.81
(71.4)
2.25
(57.2)
3.00
(76.2)
1.188
(30.2)
.75 (19.1)
2X 1/4 (M6) CLR
1.00
(25.4)
3.625 (92.1)
.75 (19.3)
.88 (22.4)
2.25 (57.2)
1.00
(25.4)
1/4-20 THD
.28 (7.1)
.44 (11.2)
.31 (7.9)
1.19
(30.2)
.75 (19.1)
2X 1/4 (M6) CLR
CBORE FAR SIDE
.50
(12.5)
M6 THD
3X 1/4 (M6) CLR
.50
(12.5)

Newport