AKP-TA
FIXED KINEMATIC ADAPTER

TOP MOUNTING METHOD

BOTTOM MOUNTING METHOD

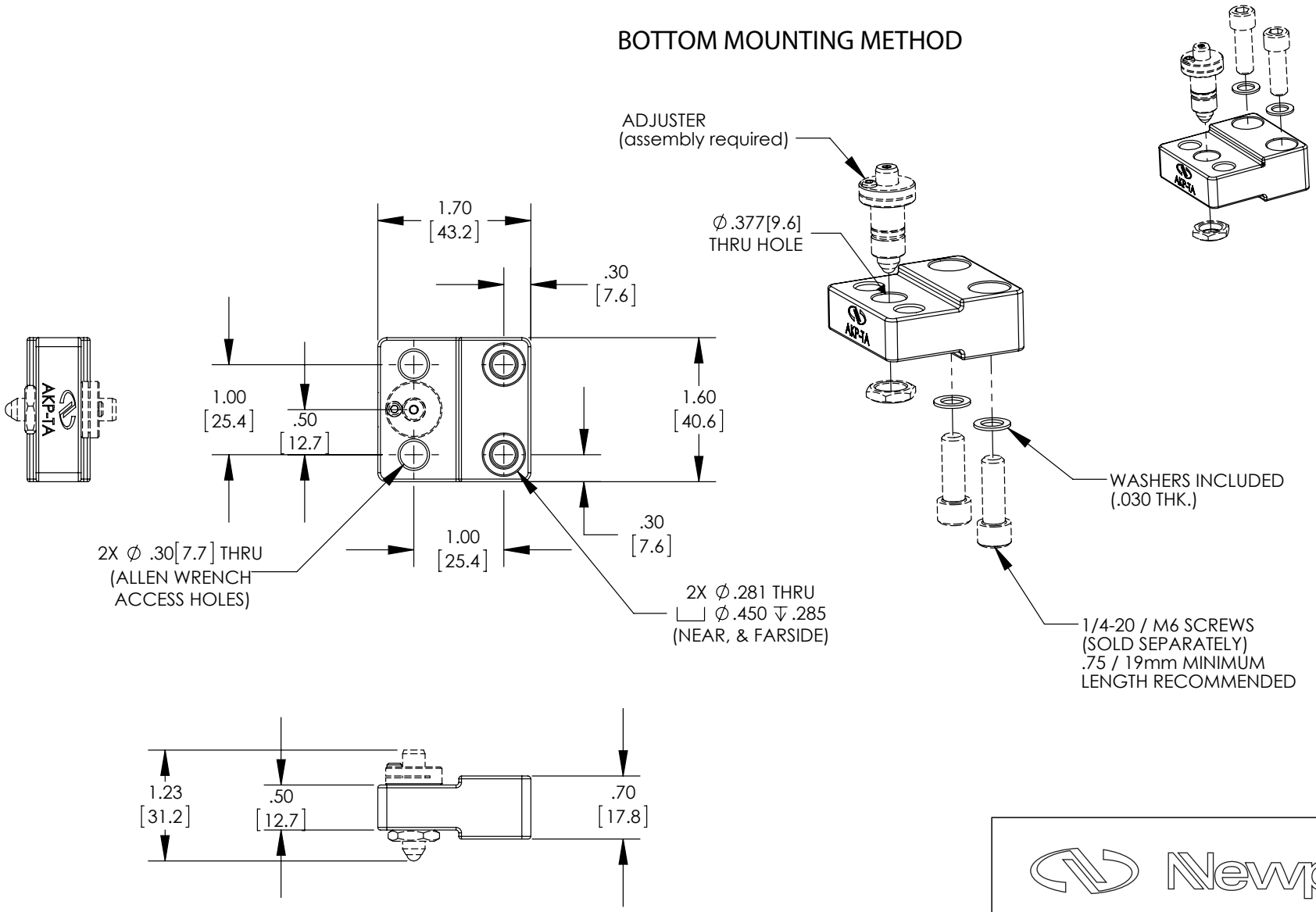

Newport