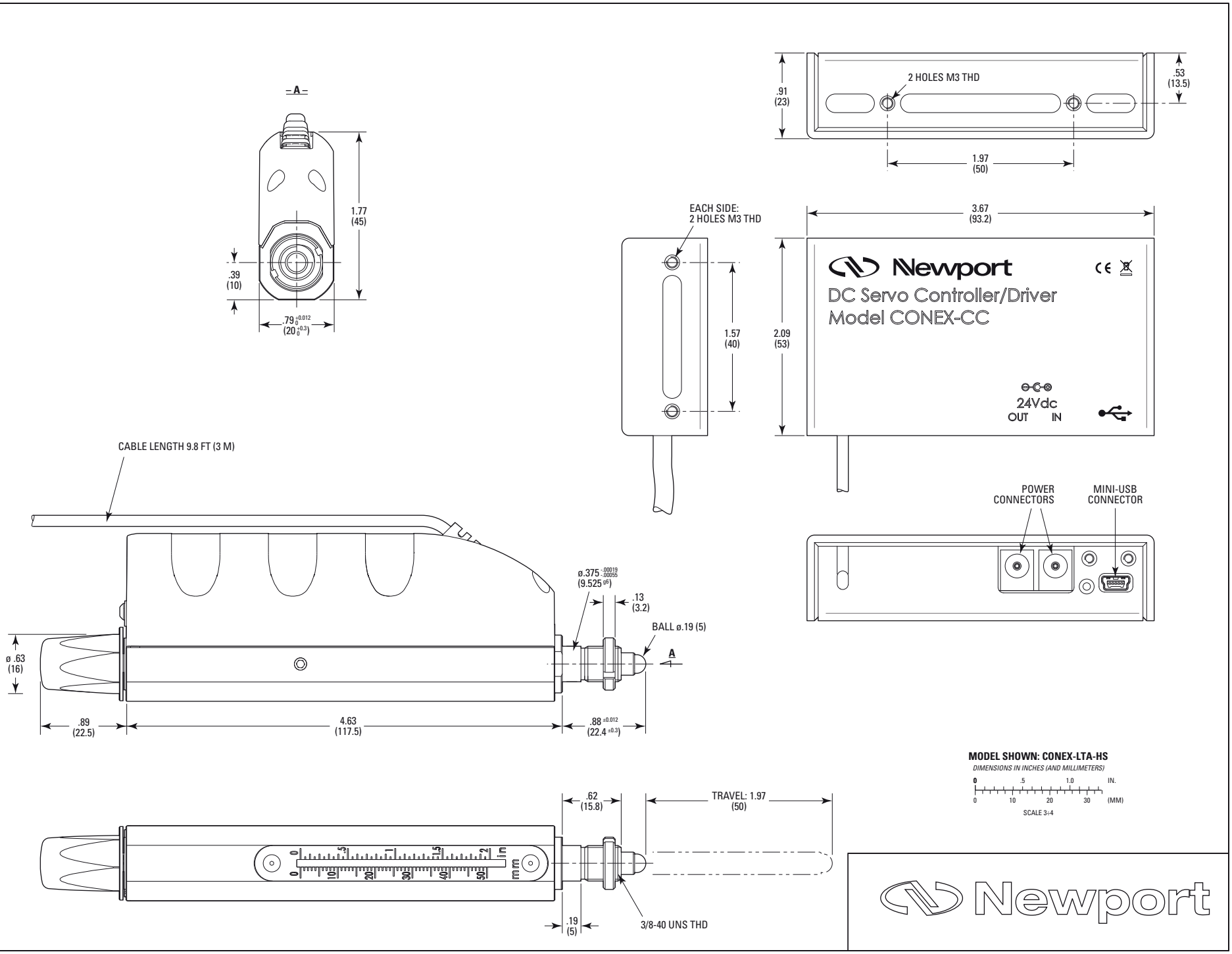
A
1.77
(45)
.39
(10)
.79 0 +0.012
(20 0 +0.3)
2 HOLES M3 THD
.91
(23)
.53
(13.5)
1.97
(50)
EACH SIDE:
2 HOLES M3 THD
3.67
(93.2)
1.57
(40)
2.09
(53)
Newport
DC Servo Controller/Driver
Model CONEX-CC
24Vdc
OUT
IN
CABLE LENGTH 9.8 FT (3 M)
POWER
CONNECTORS
MINI-USB
CONNECTOR
ø .63
(16)
ø.375 -.00019 -.00055
(9.525 g6)
.13
(3.2)
BALL ø.19 (5)
A
.89
(22.5)
4.63
(117.5)
.88 ±0.012
(22.4 ±0.3)
.62
(15.8)
TRAVEL: 1.97
(50)
.19
(5)
3/8-40 UNS THD
MODEL SHOWN: CONEX-LTA-HS
DIMENSIONS IN INCHES (AND MILLIMETERS)
0
.5
1.0
IN.
0
10
20
30
(MM)
SCALE 3:4
Newport