LBP2-SAM-2
Beam Sampler for C-mount Cameras

P/N LBP2-SAM-UV2, LBP2-SAM-VIS2, LBP2-SAM-NIR2 and LBP2-SAM-BB2

User Notes

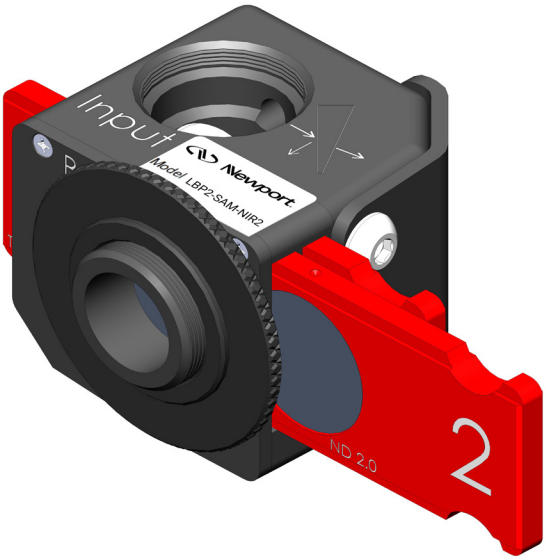

Newport Corporation
1791 Deere Avenue
Irvine, CA 92606
www.newport.com

For Sales, Service or Technical Support
Phone (887) 835-9620
Fax (949) 253-1680
E-mail: sales@newport.com
E-mail: tech@newport.com

Document No: 50399-001 August 29, 2017 Rev A

Components

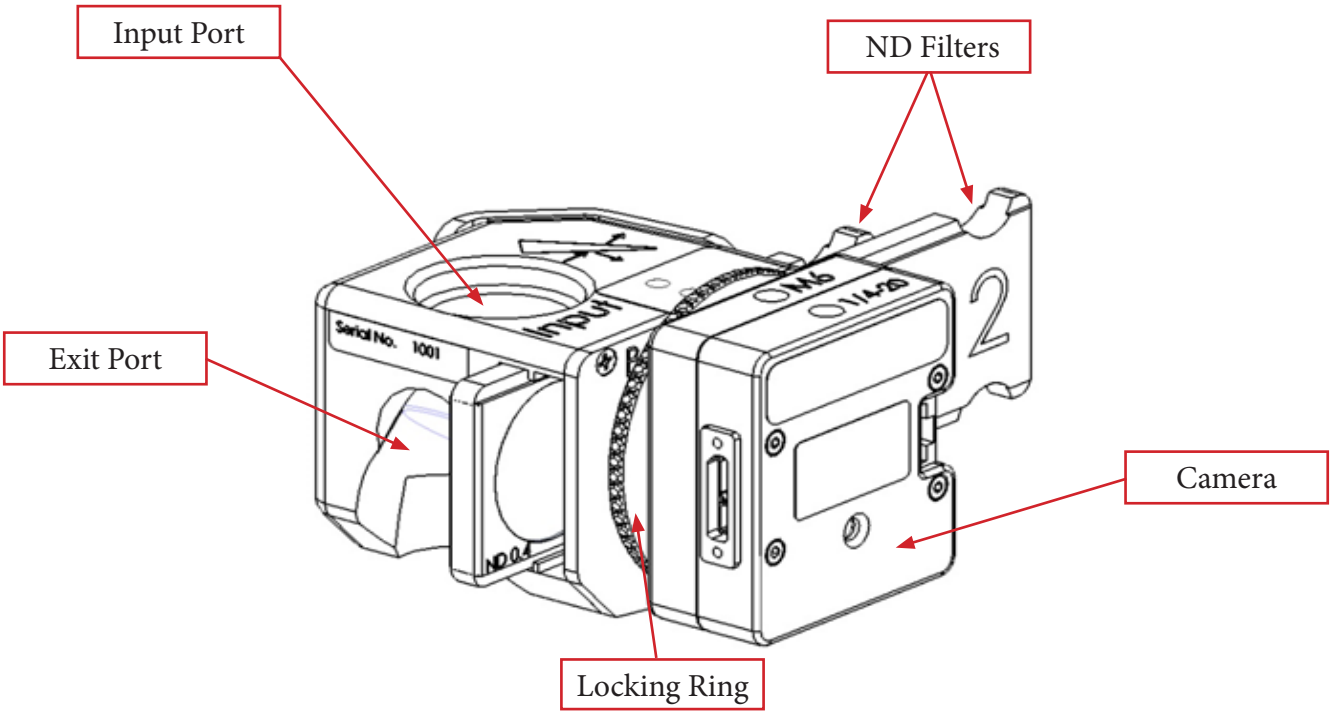
Input Port
ND Filters
Exit Port
Camera
Locking Ring
INPUT
Serial No. 1001
ND 0.6
ND 1.5
ND 4.0
2

Dimensions

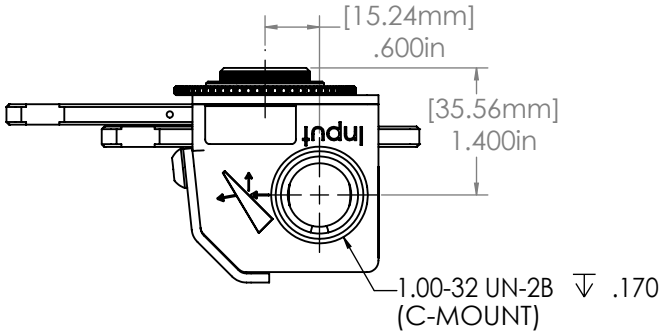

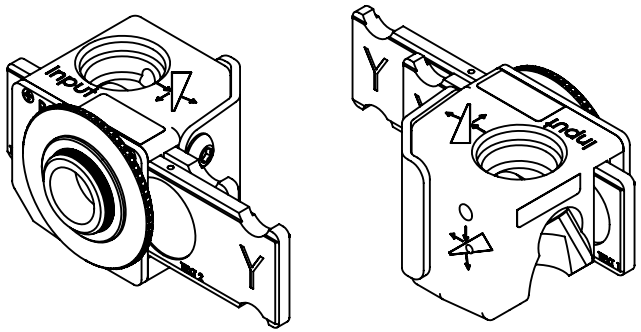

Nominal Path Length = 2.820in [71.63mm]

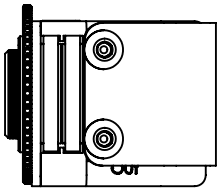

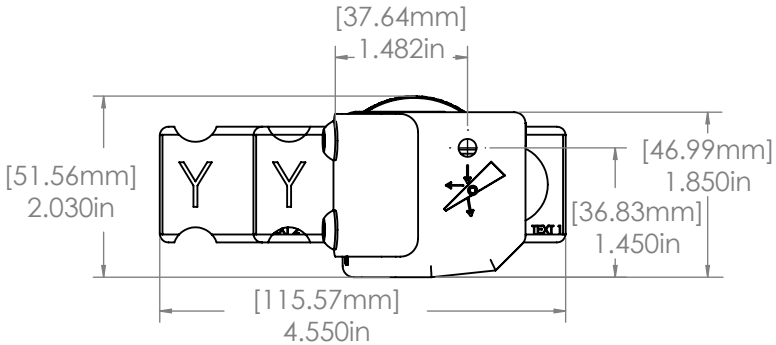

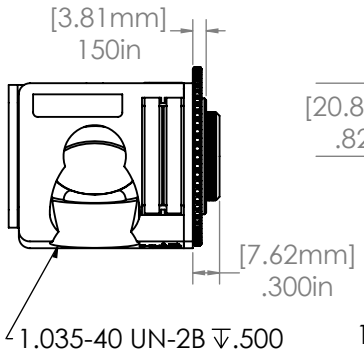

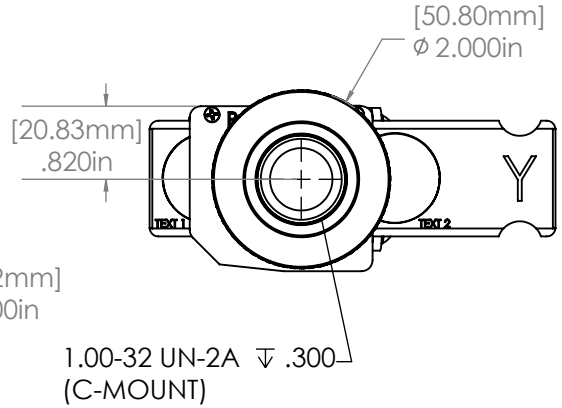

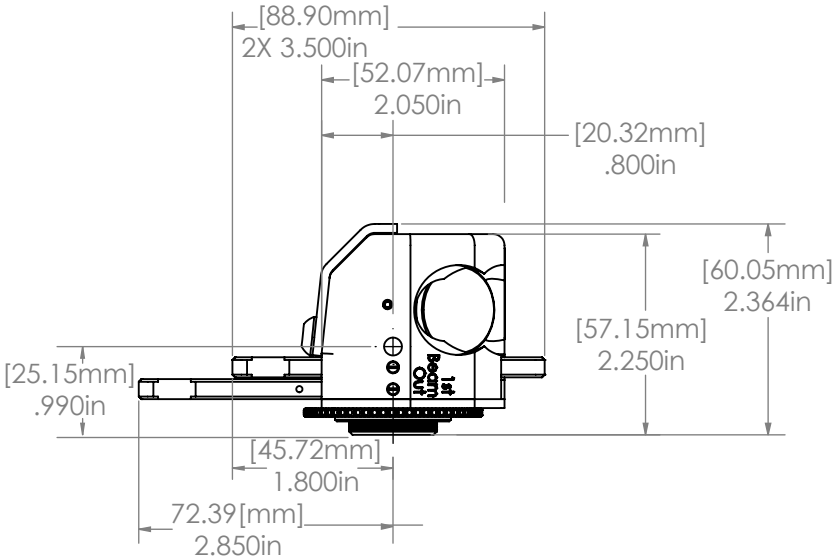

Introduction

The LBP2-SAM-2 beam sampler attachment for C-mount, CS-mount, or Ophir mount cameras allows you to measure laser beams with diameters up to 15mm and powers ranging from 10mW to ~400W[1].

LBP2-SAM-2 and SP900 camera

The design of the beam sampler maintains the original polarization of the beam under test conditions.

The front surface reflection from two beam splitters directs the beam through the filter slides and then on to the camera sensor. Approximately 97-99% of the beam is transmitted through the beam sampler with ≥ 0.01% passed on to the camera[2].

A set of interchangeable ND filters are provided to make final intensity adjustments to the beam before it reaches the camera imager.

For additional attenuation, an external wedge (Part Number SPZ17015 or SP90273) may be mounted at the input port; however this 3rd wedge will cause polarization selectivity when the beam is significantly polarized in the S and P planes.

Alternatively, two units can be coupled in series providing up to 10^{-8} attenuation[3].

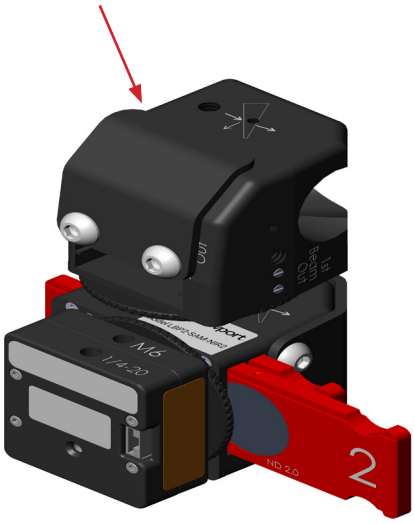

[1] 0.5mW to ~400W for LBP2-SAM-BB2

[2] The LBP2-SAM-BB2 passes 0.25% to the camera.

[3] 6×10^{-6} attenuation for the LBP2-SAM-BB2

Installation and Setup

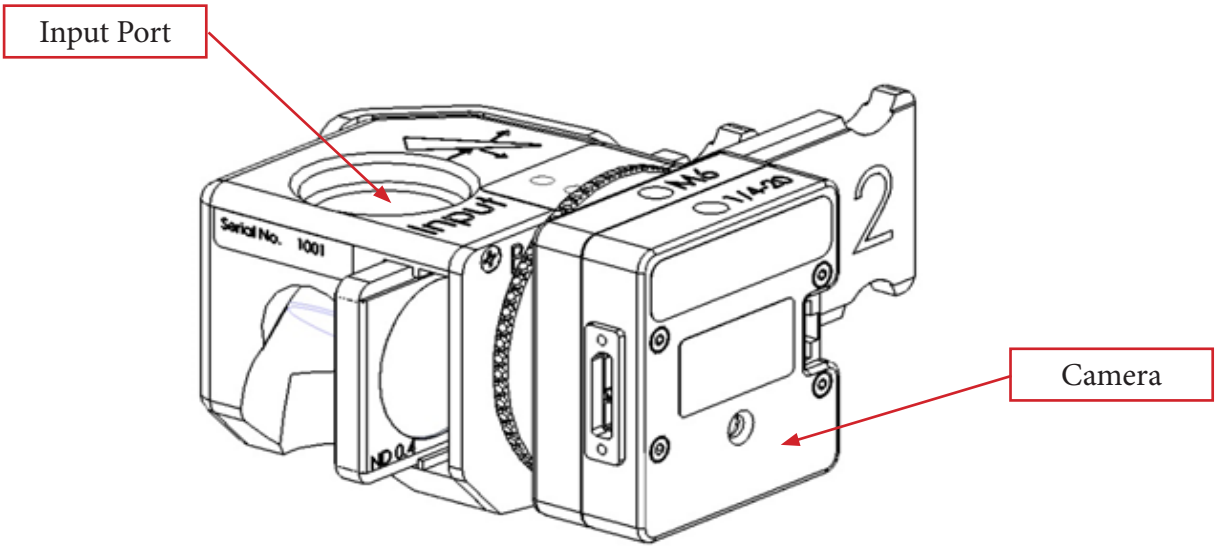

Figure 1

1. The LBP2-SAM-2 is attached to the camera as shown above in Figure 1. An adjustable locking ring is provided so that the beam sampler can be rotated in any orientation.

2. Position the LBP2-SAM-2 so the laser beam enters the center of the input port at a 90° incidence. The beam will exit the LBP2-SAM-2 turned approximately 6 degrees in the direction shown in Figure 2. Provision must be made to safely contain the transmitted beam. An optional beam dump is available to contain the beam if required.

   A 1.035-40 thread is provided behind each wedge along the axis of the output beam that can be used to directly mount accessories with 1" lens tubes such as beam dumps or even power and energy sensors to the LBP2-SAM-2.

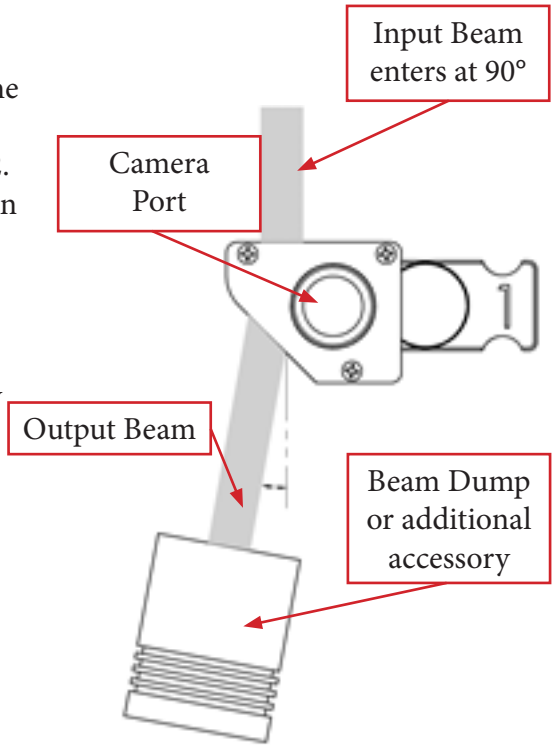

Figure 2

Warning: You must provide a beam stop for the laser beam that passes through the beam sampler. The beam stop must be able to withstand the continuous power/energy of the input beam.

3. Adjust the position of the LBP2-SAM-2 so that the beam will exit the center of the camera port. An alignment fixture consisting of a ground glass plate is provided to assist in aligning visible beams to the camera imager. This plate allows you to directly view a visible or UV beam (UV by secondary emissions). In the NIR, you will need to use an NIR viewer or a visible alignment beam. To use the alignment fixture. Screw the fixture onto the camera port and center the image of the beam in the plate. See Figure 3. When the LBP2-SAM-2 is aligned, remove the alignment fixture and attach the camera.

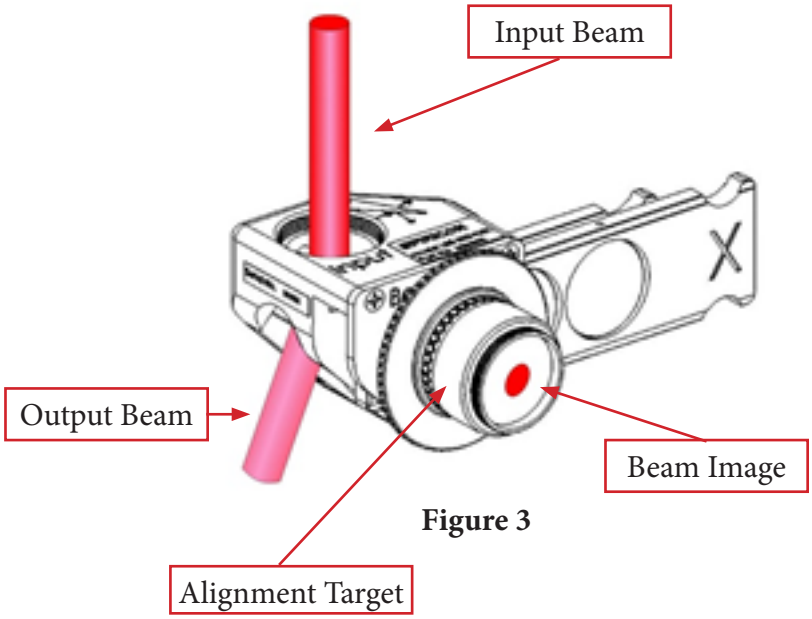

Figure 3

Operation

1. Start the beam profiler software and adjust the ND filter holders until the maximum beam intensity is approximately 80% of saturation. See Appendix A for ND filter details. If there are interference effects seen, slight angling of the camera-sampler setup to the beam path may eliminate this.

2. If no picture is seen, check again that the beam is aligned into the sampler. If the image is saturated when the maximum ND filters are in place, lower the camera signal below saturation by reducing the camera exposure setting . This can also be done by removing the camera, adding one or more of the C-mount ND filters provided with the camera, and remounting the camera.

Note: At power levels >5 Watts/cm^2 the ND filters may start to thermal lens and deform the observed beam profile.

Caution: The damage threshold for the ND filters is 50 Watts/cm^2. Make sure the power density in the beam as it hits the ND filters does not exceed this amount. If the beam is converging (focusing) rather than collimated, be sure to take this effect into consideration as well.

Ordering Information

Compact Laser Beam Sampling Systems for C-mount Cameras				
Part No.	**LBP2-SAM-UV2**	**LBP2-SAM-VIS2**	**LBP2-SAM-NIR2**	**LBP2-SAM-BB2**
Wavelength	266-355nm	400-700nm	1064nm	190-1550nm
Wedge Material	UVFS	UVFS	UVFS	UVFS
Wedge Coating	A/R ≤1%	A/R ≤1%	A/R ≤1%	None
Clear aperture	17.5mm	17.5mm	17.5mm	17.5mm
Wedge ND value, each	ND ≥2	ND ≥2	ND ≥2	ND ~1.3
ND Filters	Inconel	Bulk ND	Bulk ND	One each of the UV, VIS, & NIR sets
ND Values, nominal	.3, .7, 1.0, 1.5, 2.5, 3.0 (Blue holders)	.3, .7, 1.0, 2.0, 3.0, 4.0 (Green holders)	.4, .8, 1.0, 2.0, 3.0, 4.0 (Red holders)	See UV, VIS and NIR descriptions
Filter Slides	3	3	3	9
Filter Damage[1]	100 W/cm² CW 20mJ/cm², 10ns pulse	50 W/cm² 1J/cm², 10ns pulse	50 W/cm² 1J/cm², 10ns pulse	See UV, VIS and NIR specifications
Accessories*				
Additional Wedge Splitters	**SPZ17015**	15mm clear aperture		
	SP90273	30mm clear aperture		

* Available as special order. Consult your Newport or Ophir-Spiricon representative.

Features:

- C-mount stackable design compatible with most other C-mountable accessories
- Wedges removable for replacement and cleaning
- Multiple mounting points
- Marked for easy use
- Lenses can be added for Focal Spot Analysis operation and divergence analysis
- Power/Energy meter at 1st exit port can measure ~99% (~95%-BB) of input beam

Appendix A: ND Filters

The ND filters provided with each LBP2-SAM-2 allow for final attenuation of the laser beam up to ND 6. Each filter in the holder provides for a different value of attenuation. To use, slide the desired holder into the slot in the LBP2-SAM-2. A click is felt when the filter is properly aligned with the beam.

Holder Number	Filter A	Filter B
1	0.3	0.7
2	1	2
3	3	4

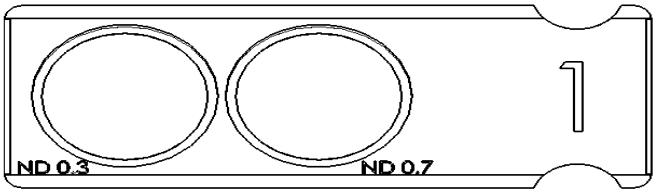

The attenuations at specified wavelengths are available in the charts below.

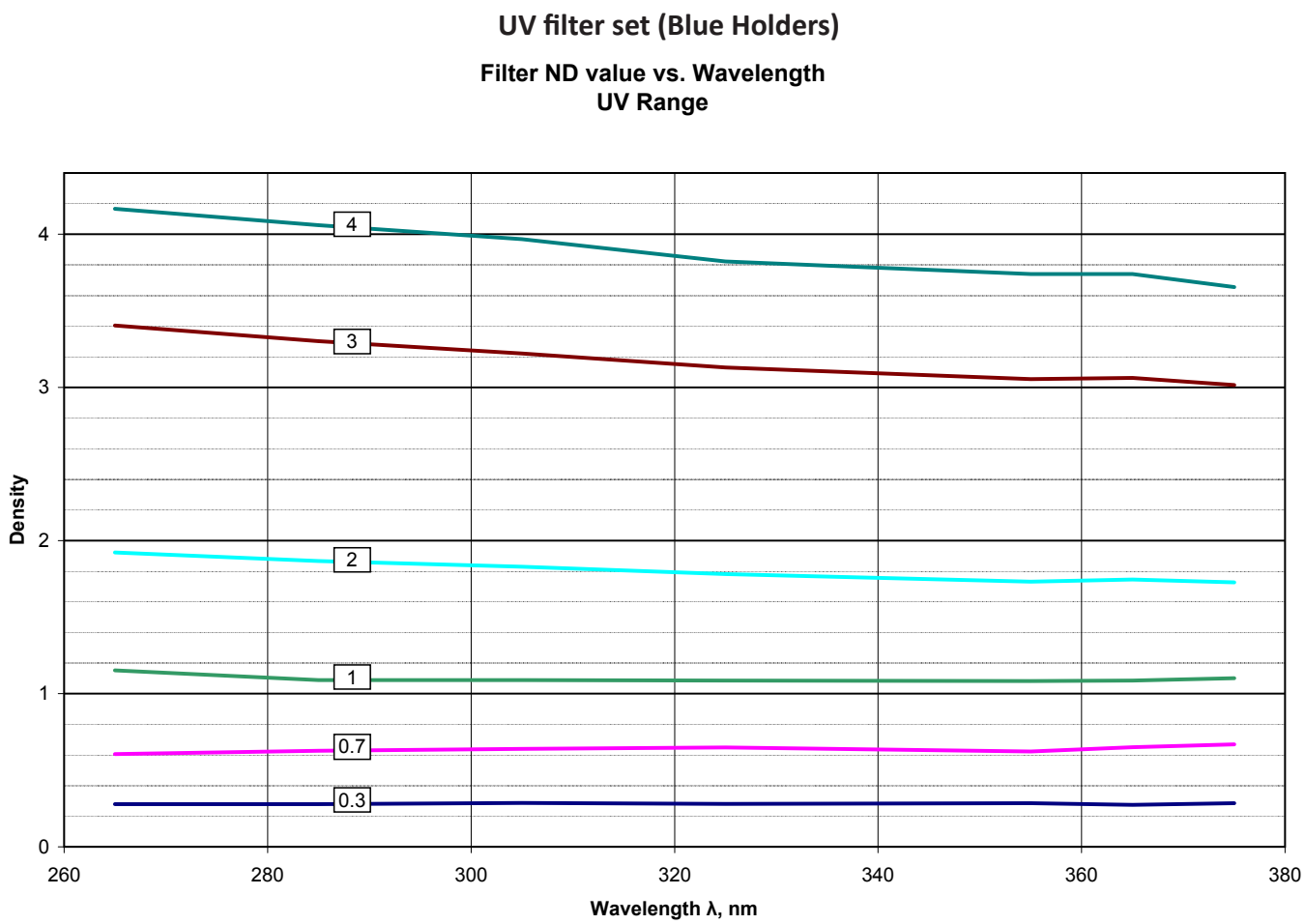

VIS filter set (Green Holders)

Filter ND value vs. Wavelength
Visible Range

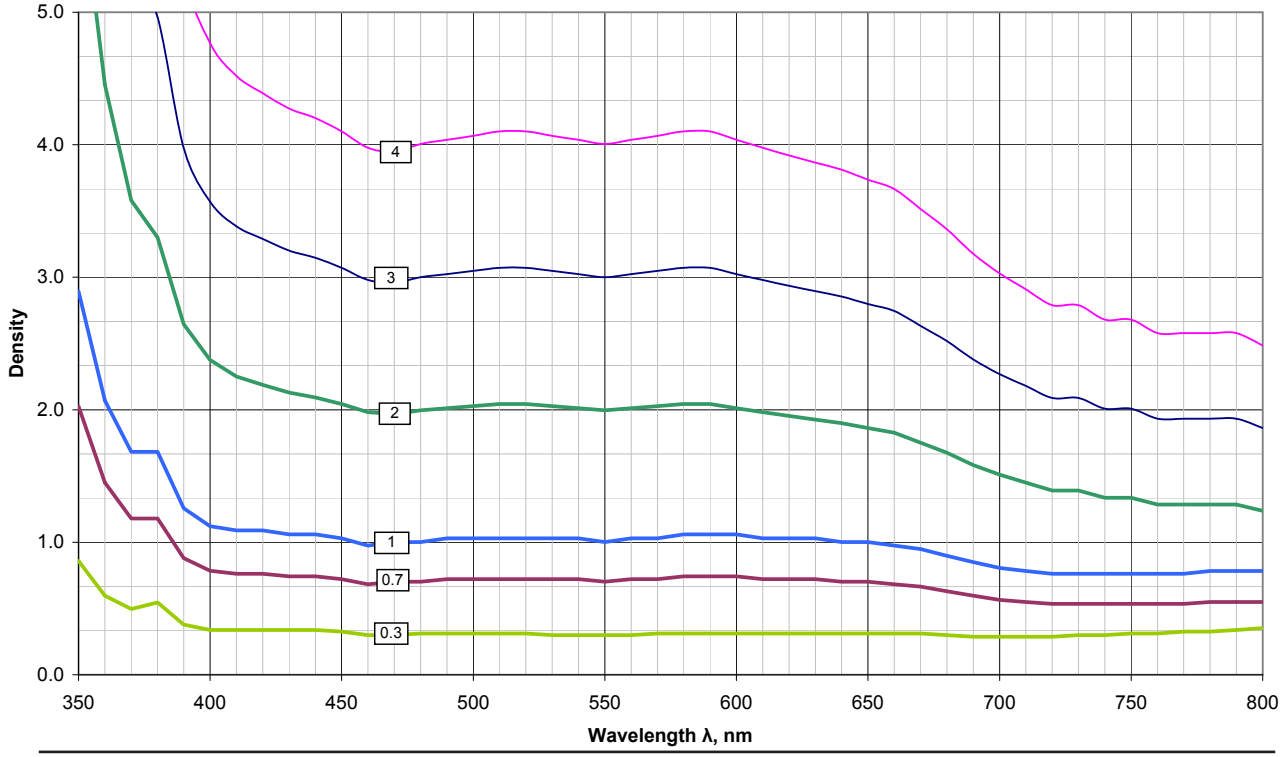

NIR filter set (Red Holders)

Filter ND value vs. Wavelength
NIR Range

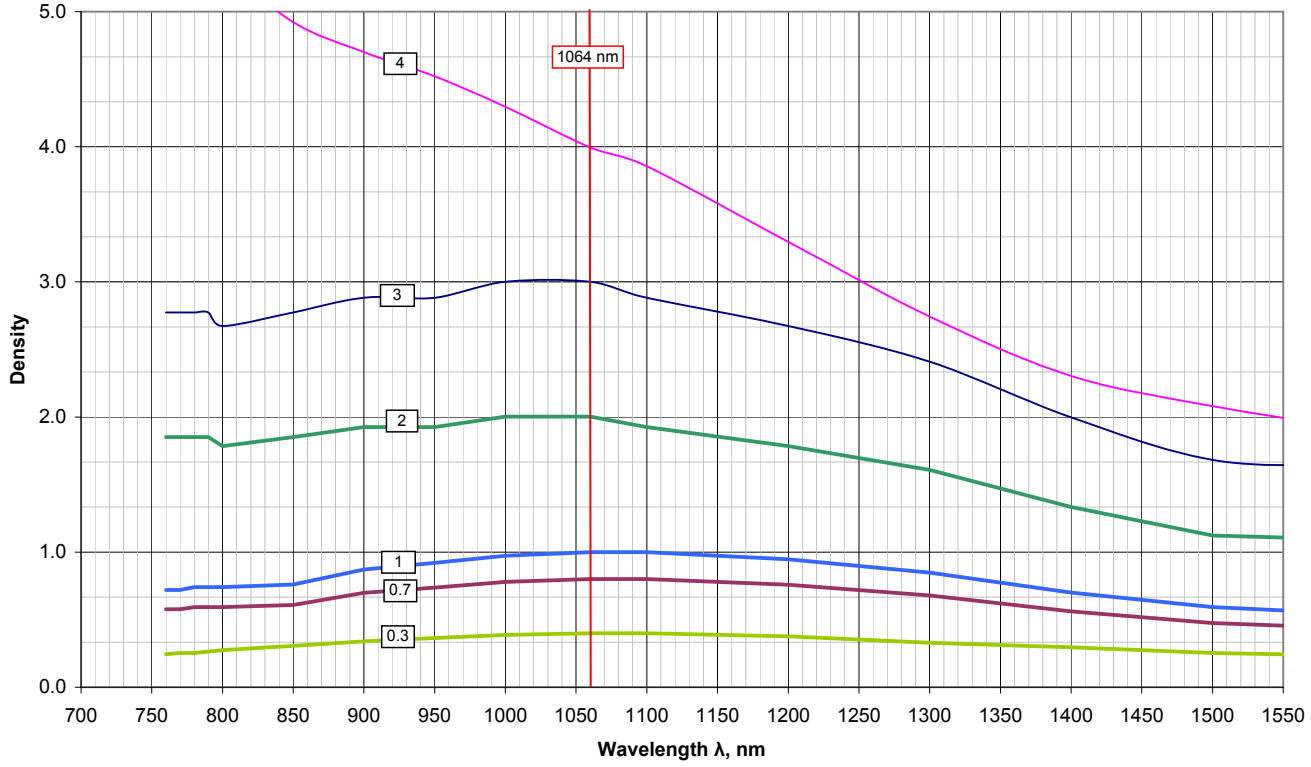

Notes:

Notice

Document No: 50399-001 August 29, 2017 Rev A