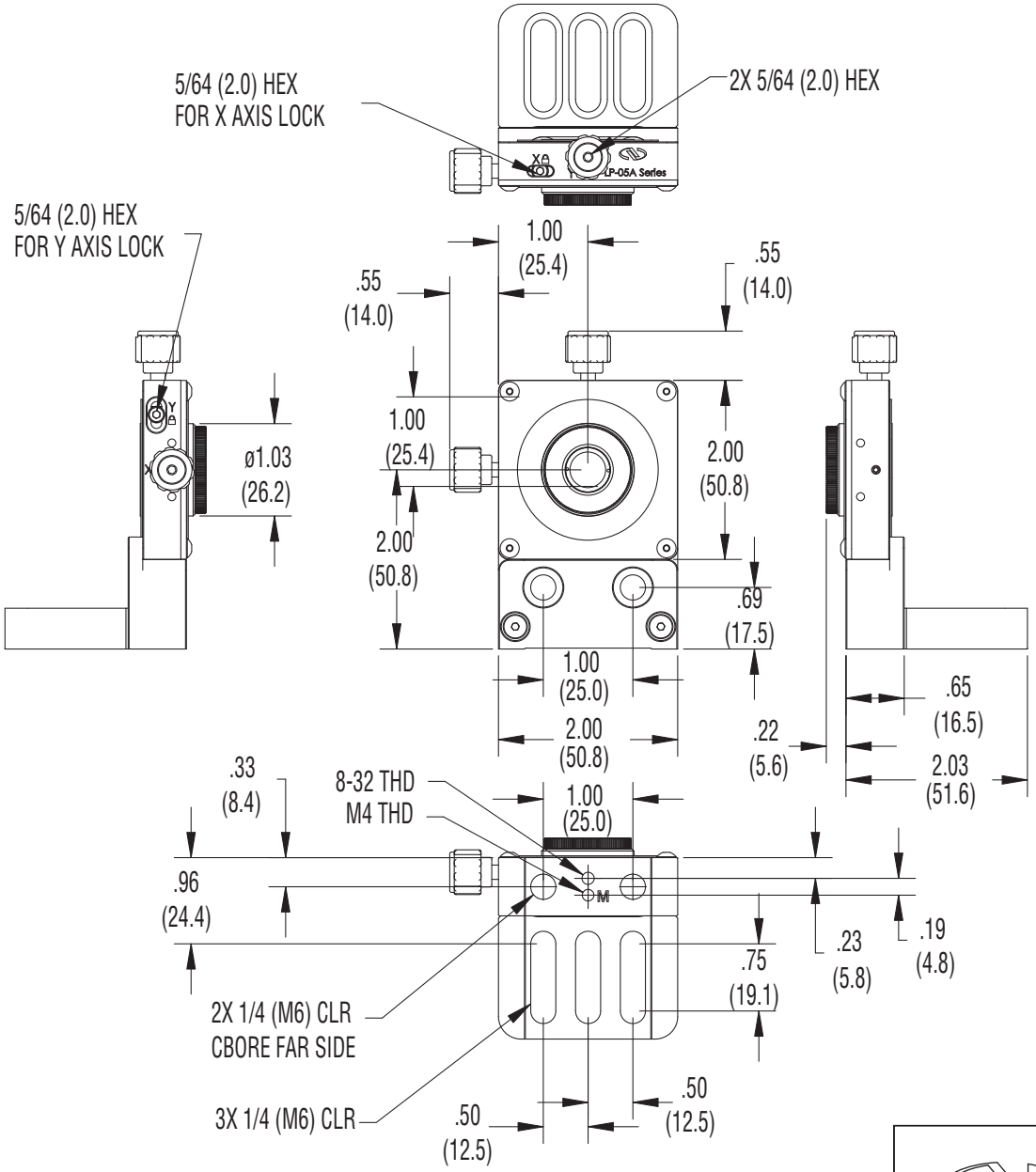
5/64 (2.0) HEX
FOR X AXIS LOCK
2X 5/64 (2.0) HEX
LP-05A Series
5/64 (2.0) HEX
FOR Y AXIS LOCK
1.00
(25.4)
.55
(14.0)
.55
(14.0)
1.00
(25.4)
ø1.03
(26.2)
2.00
(50.8)
2.00
(50.8)
.69
(17.5)
1.00
(25.0)
2.00
(50.8)
.22
(5.6)
.65
(16.5)
2.03
(51.6)
.33
(8.4)
8-32 THD
M4 THD
1.00
(25.0)
.96
(24.4)
.23
(5.8)
.19
(4.8)
.75
(19.1)
2X 1/4 (M6) CLR
CBORE FAR SIDE
3X 1/4 (M6) CLR
.50
(12.5)
.50
(12.5)

Newport