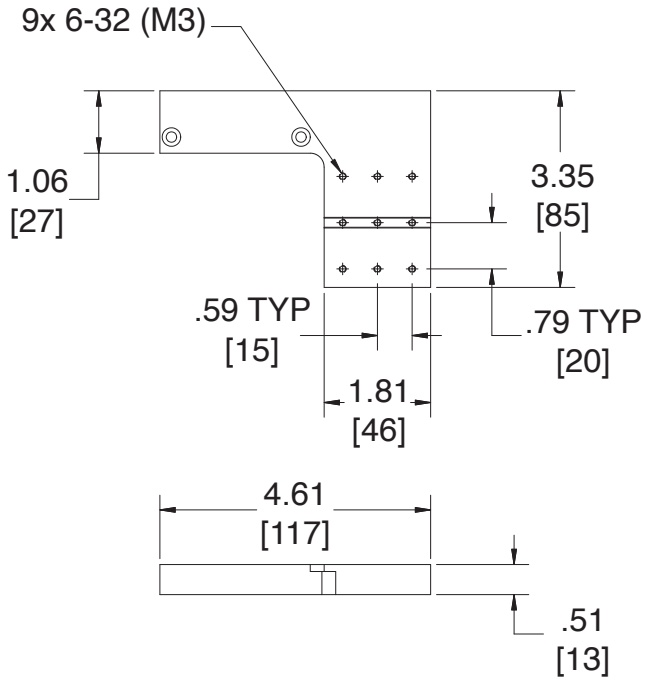

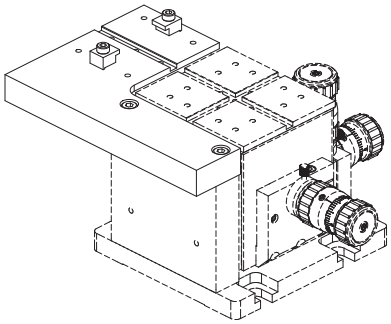

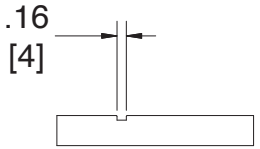

Newport