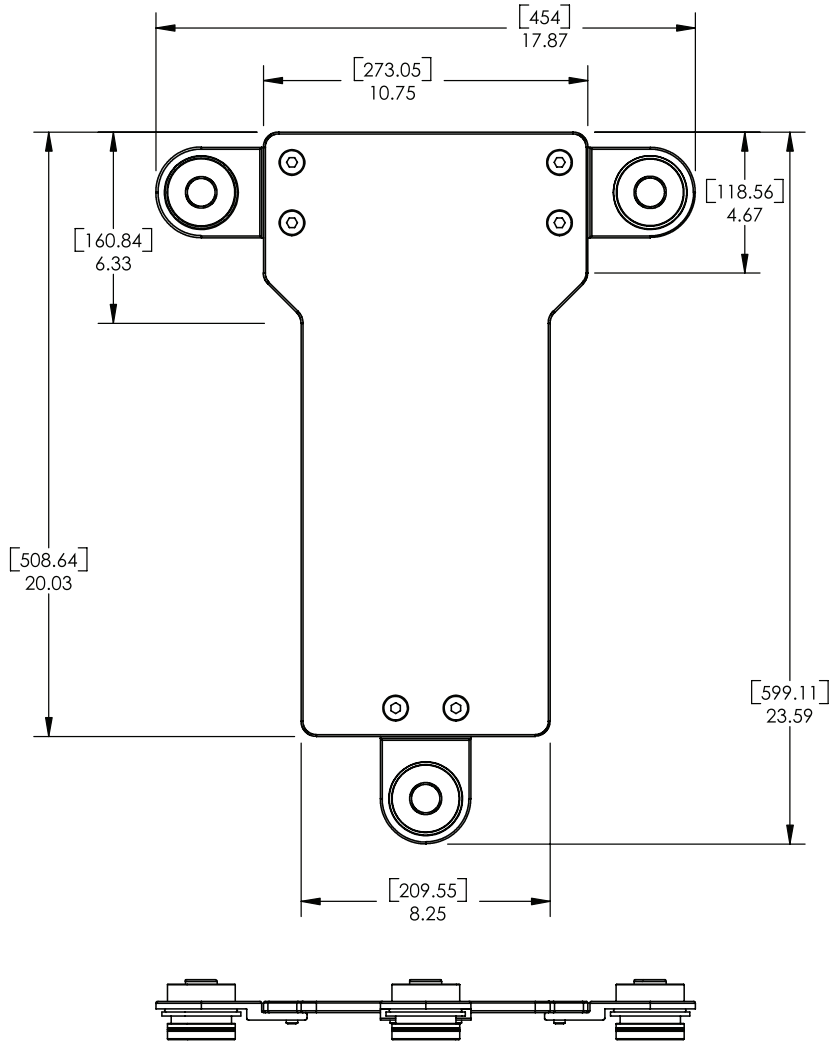
[454]
17.87
[273.05]
10.75
[118.56]
4.67
[160.84]
6.33
[508.64]
20.03
[599.11]
23.59
[209.55]
8.25

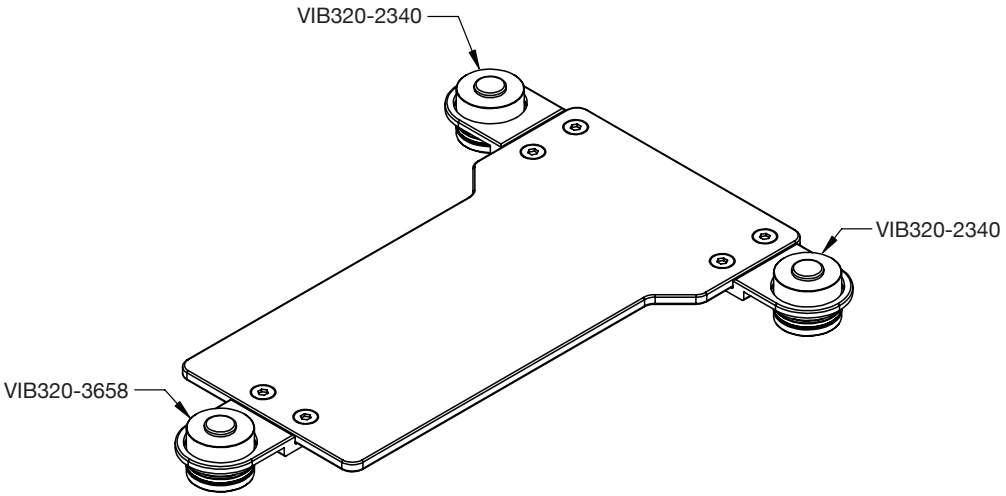
VIB320-2340
VIB320-2340
VIB320-3658

Newport®