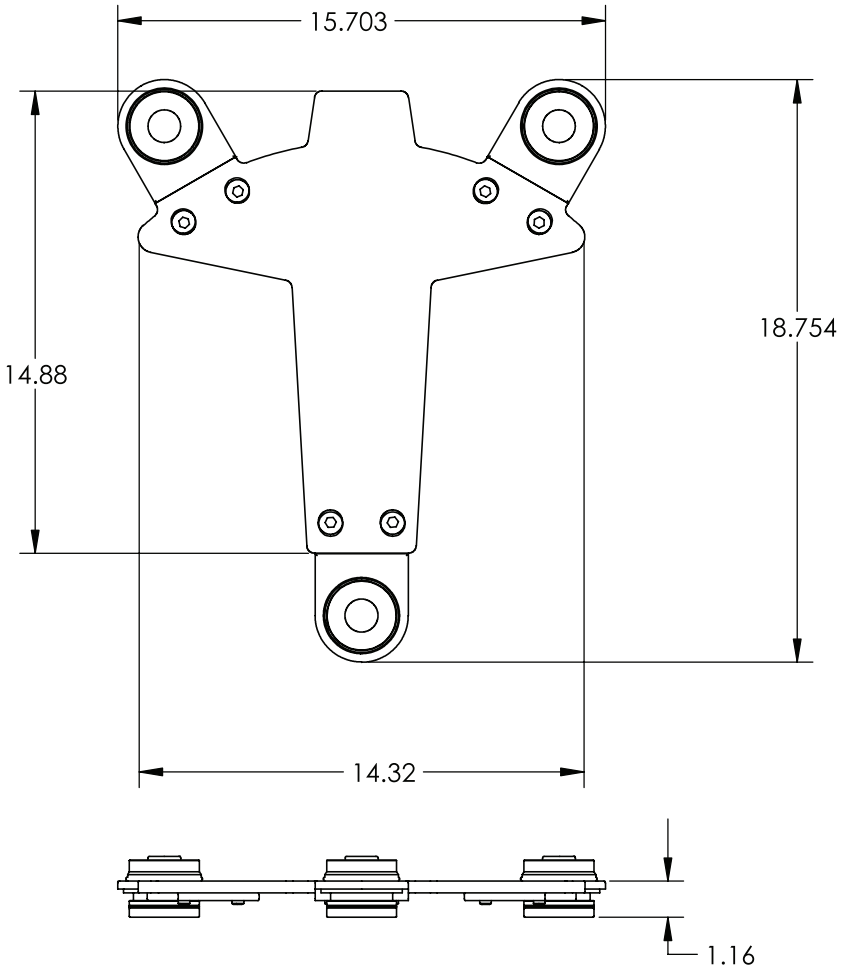
15.703
18.754
14.88
14.32
1.16

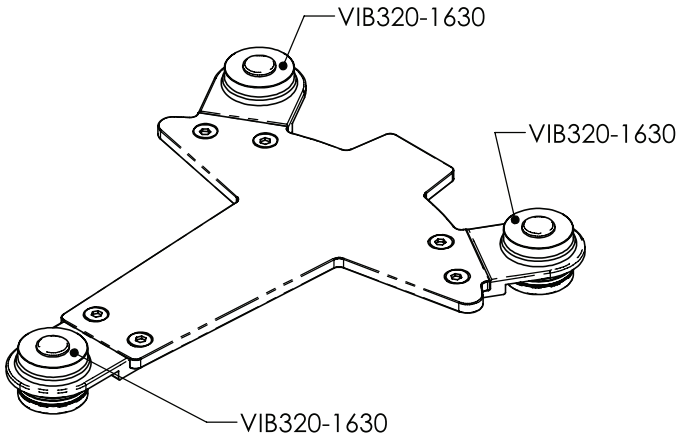
VIB320-1630
VIB320-1630
VIB320-1630

Newport®