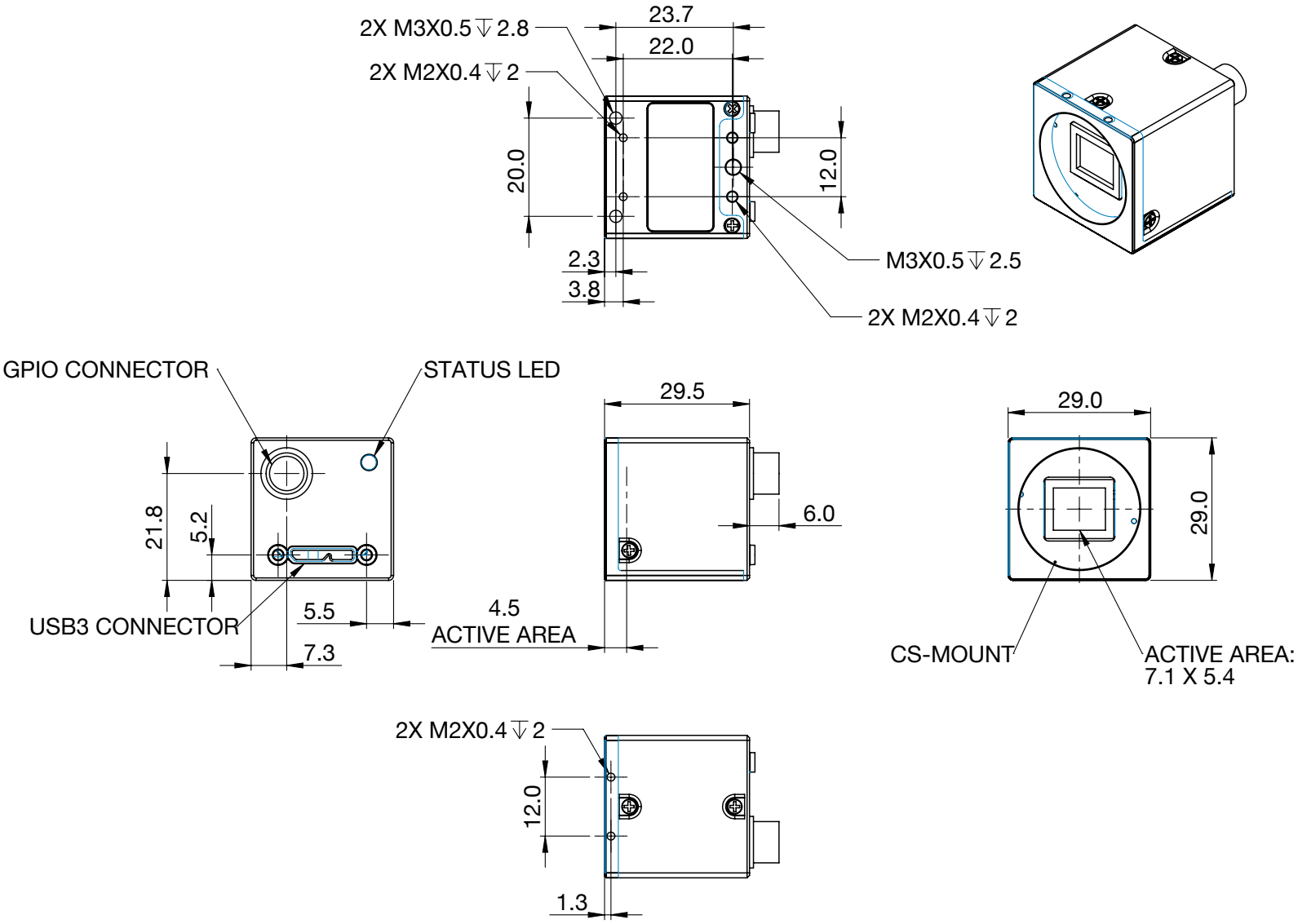
2X M3X0.5 ↧ 2.8
2X M2X0.4 ↧ 2
23.7
22.0
20.0
12.0
2.3
3.8
M3X0.5 ↧ 2.5
2X M2X0.4 ↧ 2
GPIO CONNECTOR
STATUS LED
21.8
5.2
USB3 CONNECTOR
5.5
7.3
29.5
6.0
4.5
ACTIVE AREA
29.0
29.0
CS-MOUNT
ACTIVE AREA:
7.1 X 5.4
2X M2X0.4 ↧ 2
12.0
1.3

Newport