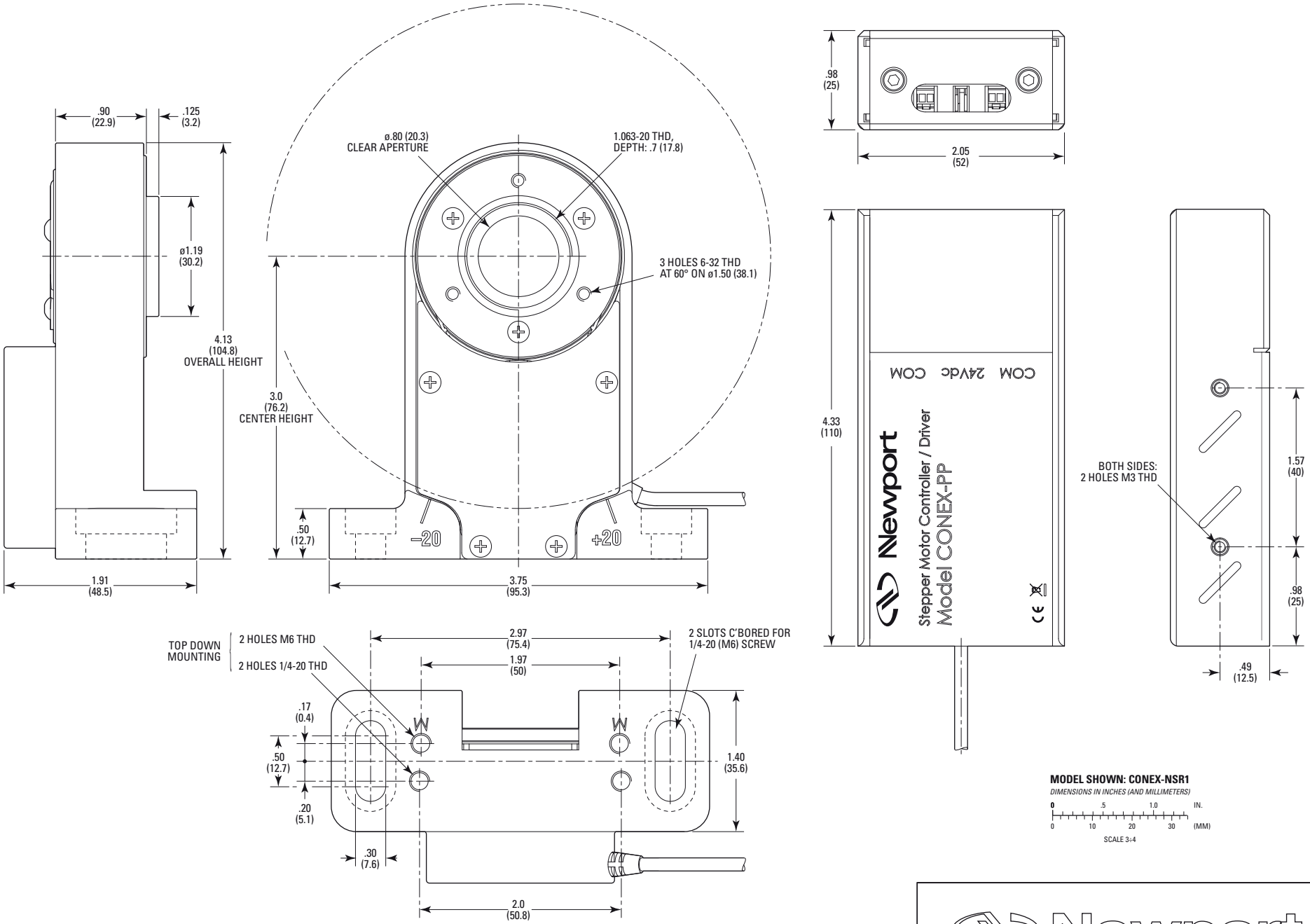
.90
(22.9)
.125
(3.2)
ø1.19
(30.2)
4.13
(104.8)
OVERALL HEIGHT
1.91
(48.5)
ø.80 (20.3)
CLEAR APERTURE
1.063-20 THD,
DEPTH: .7 (17.8)
3 HOLES 6-32 THD
AT 60° ON ø1.50 (38.1)
3.0
(76.2)
CENTER HEIGHT
.50
(12.7)
-20
+20
3.75
(95.3)
.98
(25)
2.05
(52)
4.33
(110)
COM 24Vdc COM
Newport
Stepper Motor Controller / Driver
Model CONEX-PP
BOTH SIDES:
2 HOLES M3 THD
1.57
(40)
.98
(25)
.49
(12.5)
TOP DOWN
MOUNTING
2 HOLES M6 THD
2 HOLES 1/4-20 THD
2.97
(75.4)
1.97
(50)
2 SLOTS C'BORED FOR
1/4-20 (M6) SCREW
.17
(0.4)
.50
(12.7)
.20
(5.1)
1.40
(35.6)
.30
(7.6)
2.0
(50.8)
MODEL SHOWN: CONEX-NSR1
DIMENSIONS IN INCHES (AND MILLIMETERS)
0
.5
1.0
IN.
0
10
20
30
(MM)
SCALE 3:4
Newport