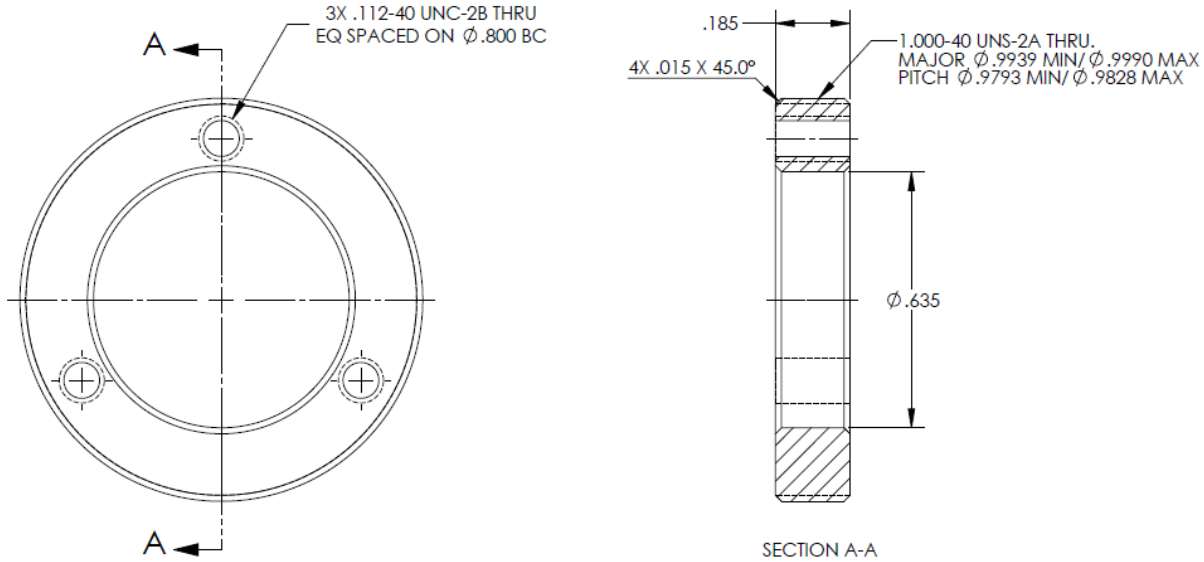
3X .112-40 UNC-2B THRU
EQ SPACED ON ∅.800 BC
A
A
.185
4X .015 X 45.0°
1.000-40 UNS-2A THRU,
MAJOR ∅.9939 MIN/∅.9990 MAX
PITCH ∅.9793 MIN/∅.9828 MAX
∅.635
SECTION A-A

Newport