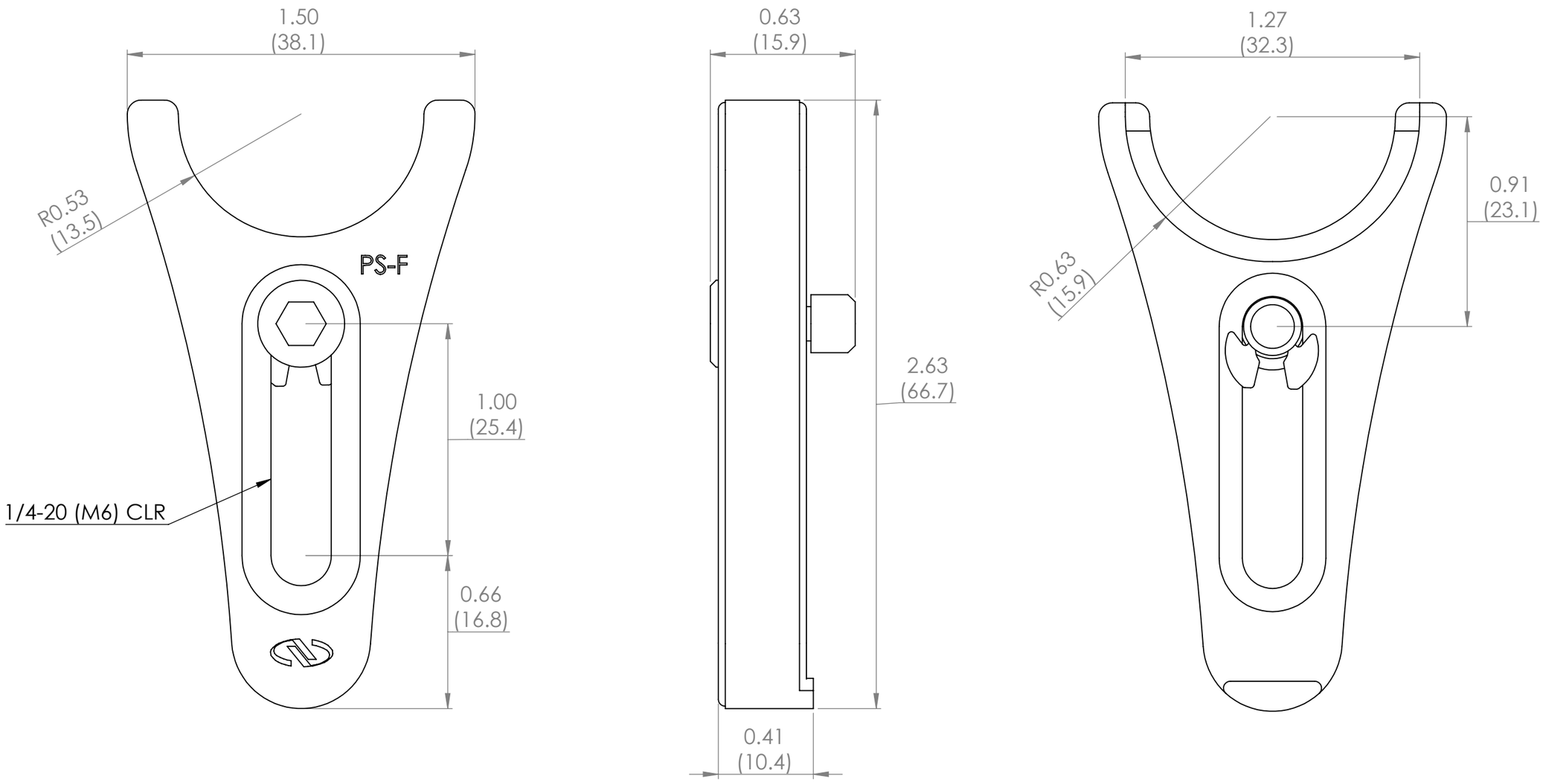

Newport®
Experience | Solutions