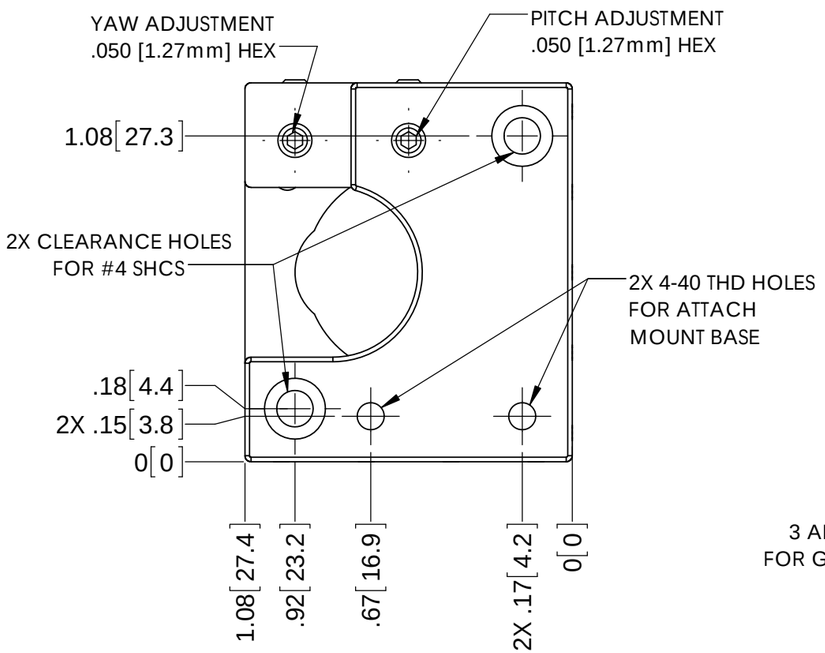

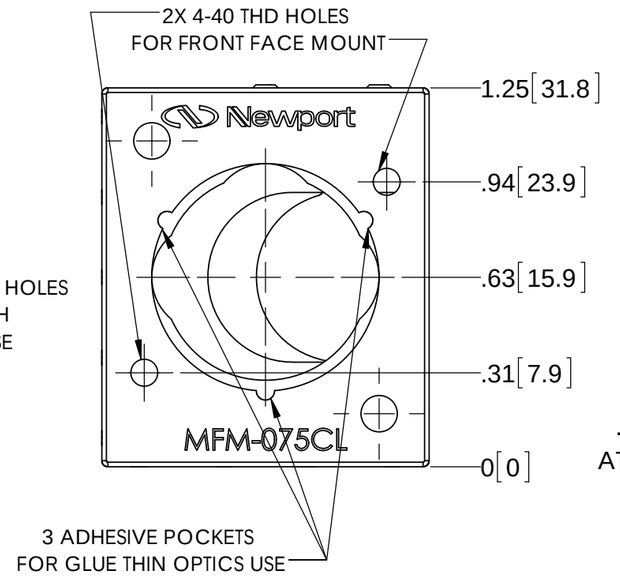

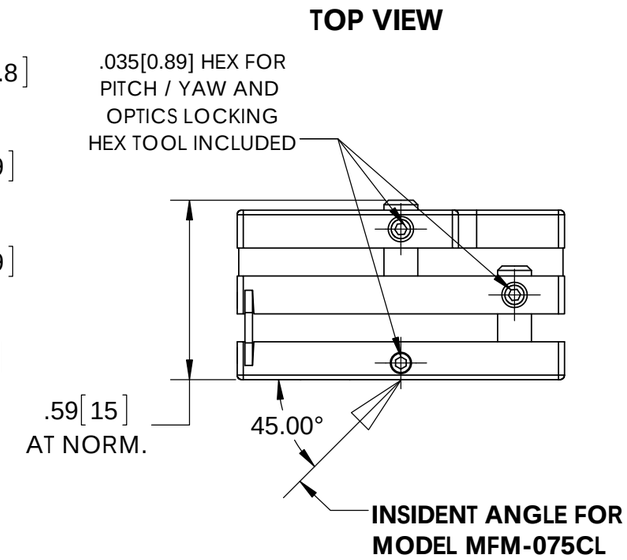

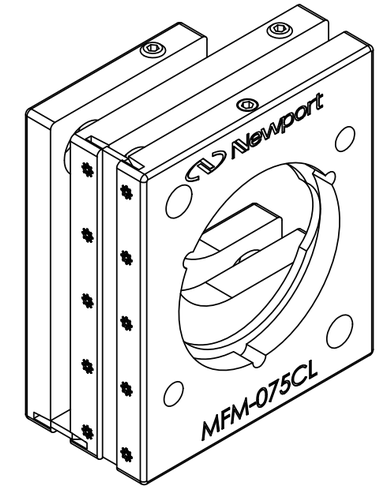

MODEL MFM-075CL

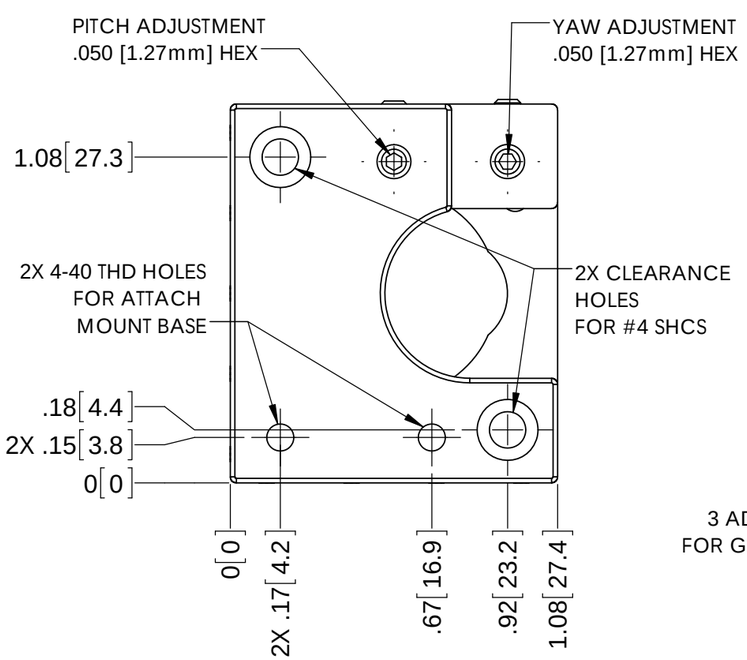

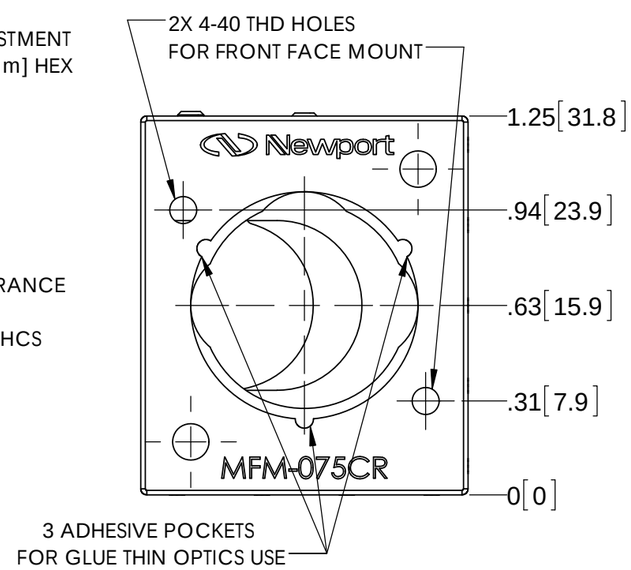

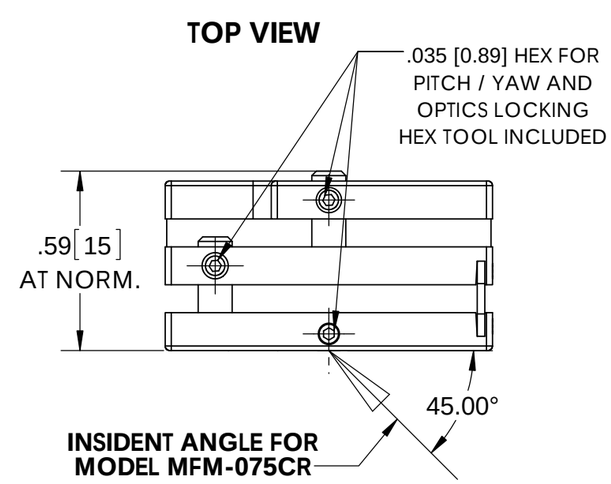

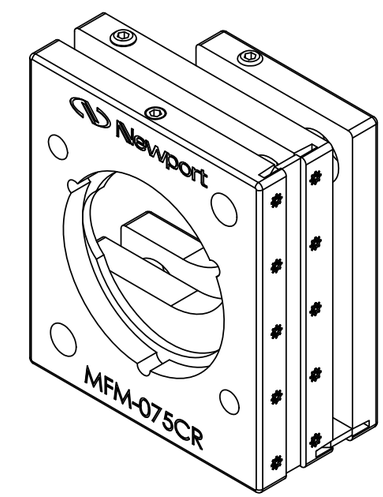

MODEL MFM-075CR

Newport®
Experience | Solutions