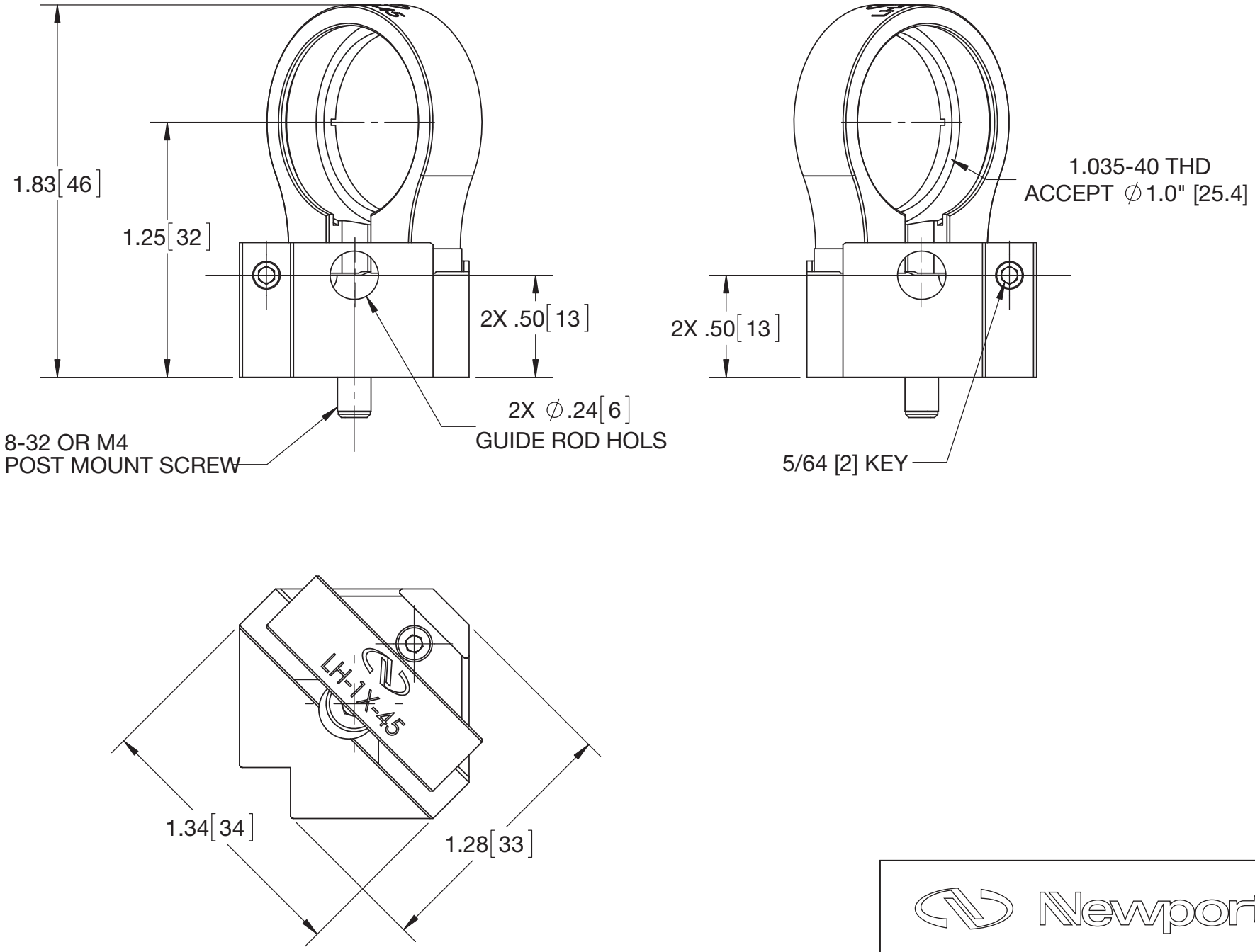
1.83[46]
1.25[32]
2X .50[13]
2X ∅.24[6]
GUIDE ROD HOLS
8-32 OR M4
POST MOUNT SCREW
1.035-40 THD
ACCEPT ∅1.0" [25.4]
2X .50[13]
5/64 [2] KEY
LH-1X-45
1.34[34]
1.28[33]

Newport