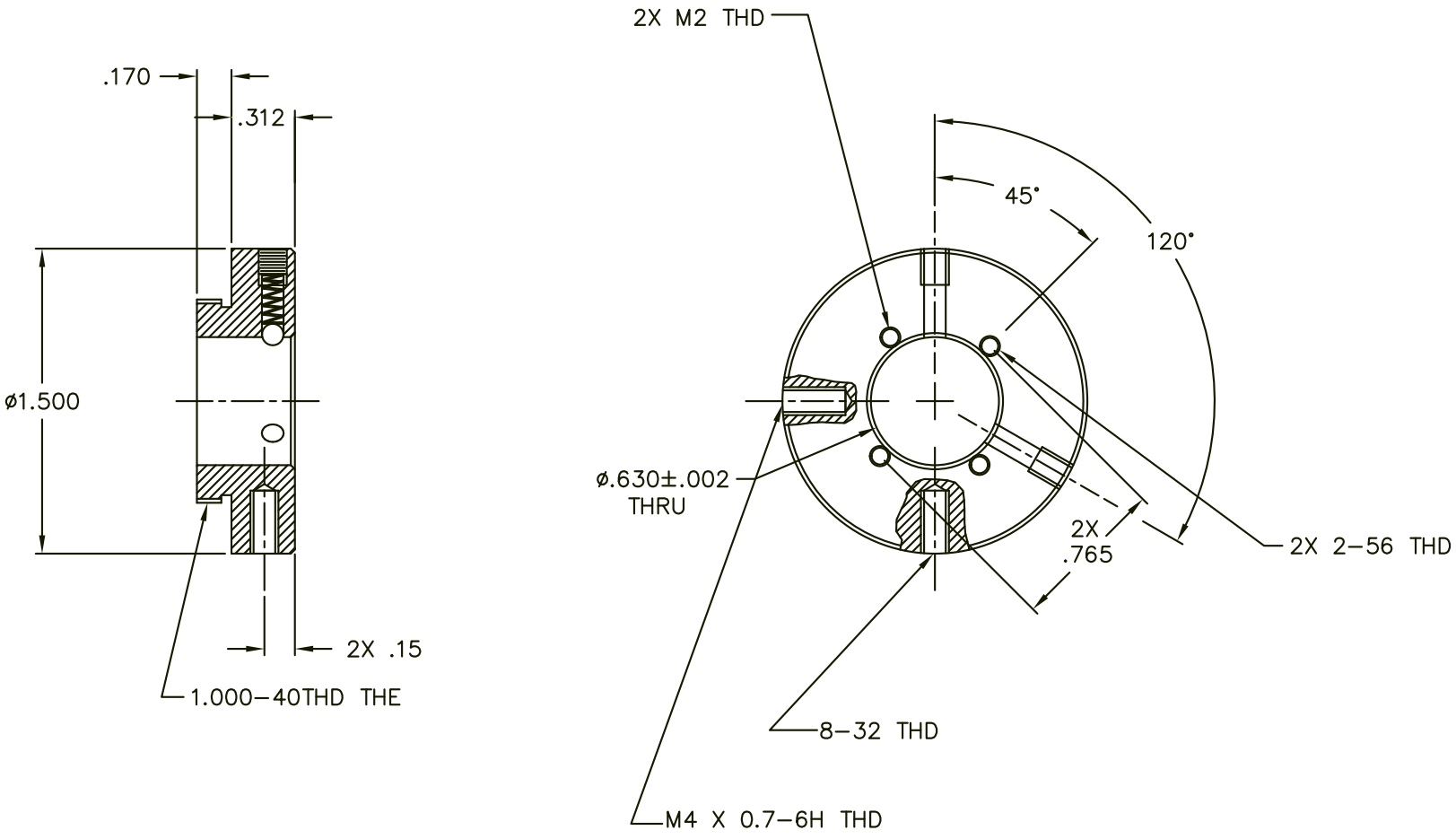
.170
.312
ø1.500
2X .15
1.000–40THD THE
2X M2 THD
45°
120°
ø.630±.002
THRU
2X
.765
2X 2–56 THD
8–32 THD
M4 X 0.7–6H THD

Newport